Operator's Manual

Articulated Tractor

MT955E
AGCC0955xGxxx1001-

MT965E
AGCC0965xGxxx1001-

MT975E
AGCC0975xGxxx1001-



North America
4205 River Green Parkway, Duluth GA 30096 USA
Challenger is a registered trademark of Caterpillar Inc. and is used under license by AGCO.
© AGCO 2017
Original Operator's Manual

November 2017
582773D1C
NA
English

Challenger®

CALIFORNIA
Proposition 65 Warning

WARNING: Diesel engine exhaust and some of its constituents are known to the State of California to cause cancer, birth defects, or other reproductive harm.

WARNING: Battery posts, terminals and related accessories contain lead and lead compounds, chemicals known to the State of California to cause cancer, birth defects, or other reproductive harm. Wash hands after handling.

Congratulations on your selection of an AGCO® Product. We believe you have exercised excellent judgment in the purchase of your AGCO® machine. We are most appreciative of your patronage.

Your Dealer has performed the pre-delivery service on your new machine.

He will discuss with you the operating and maintenance instructions given in this manual, and instruct you in the correct and varied applications of this machine. Call on him at any time when you have a question or need equipment related to the use of your machine.

We recommend that you carefully read this entire manual before operating the machine. Also, time spent in becoming fully acquainted with its performance features, adjustments, and maintenance schedules will be repaid in a long and satisfactory life of the product.

This equipment is covered by a written warranty which will be provided to you by your AGCO® Dealer at time of purchase.

AGCO® reserves the right to make changes or add improvements to its products at any time without incurring any obligation to make such changes to products manufactured previously. AGCO ®, or its dealers, accept no responsibility for variations which may be evident in the actual specifications of its products and the statements and descriptions contained in this publication.

Articulated Tractor

1 Safety 11
1.1 Safety information 13
1.1.1 Operator Manual 13
1.1.2 Important safety information 13
1.1.3 Safety symbol 14
1.1.4 Safety messages 14
1.1.5 Information messages 14
1.1.6 Safety signs 14
1.1.7 General hazard information 15
1.1.8 Pressurized air 16
1.1.9 Asbestos information 16
1.1.10 Electrical storm injury prevention 16
1.1.11 Mounting and dismounting the machine 16
1.1.12 Before starting the engine 17
1.1.13 Engine starting 17
1.1.14 Before operation 17
1.1.15 Operating procedures 17
1.1.16 Parking 18
1.1.17 Operator station 18
1.1.18 Cut and crushing prevention 19
1.1.19 Rollover protective structure 19
1.1.20 Batteries 20
1.1.21 Burn prevention 21
1.1.22 Coolant 21
1.1.23 Oils 21
1.1.24 High pressure lines 21
1.1.25 Fluid penetration 22
1.1.26 Exhaust fumes 22
1.1.27 Noise prevention 23
1.1.28 Fire and explosion prevention 23
1.1.29 Fire extinguisher 24
1.1.30 Public road transportation 24
1.2 Safety signs and labels 25
1.3 Engine safety signs 26
1.3.1 Engine oil filter 27
1.3.2 Belt routing 27
1.3.3 Informational - cab air conditioning 27
1.3.4 Separator filter 27
1.3.5 Fuel filter 28
1.3.6 Hot surface 28
1.3.7 High pressure hazard 28
1.3.8 Entanglement 29
1.3.9 Entanglement 29
1.3.10 Run over hazard 29
1.3.11 Fuel filter 29
1.3.12 Separator filter 30
1.3.13 Informational - engine air cleaner 30
1.3.14 Engine oil filter 30
1.3.15 Ether 30
1.3.16 Hot pressurized coolant 31
1.3.17 Engine oil sign 31
1.3.18 No step 31

1.4 Chassis safety signs . . . 32
1.4.1 Grease points . . . 33
1.4.2 Engine cover support . . . 33
1.4.3 Radiation hazard . . . 33
1.4.4 Ultra low sulfur diesel fuel . . . 33
1.4.5 Tiedown . . . 34
1.4.6 Lift . . . 34
1.4.7 Articulation lock . . . 34
1.4.8 Pinching hazard . . . 34
1.4.9 Fall hazard . . . 35
1.4.10 Crush hazard . . . 35
1.4.11 Rear rollover hazard . . . 35
1.4.12 Power take off . . . 35
1.4.13 No step . . . 36
1.5 Cab safety signs . . . 37
1.5.1 Bystander notification . . . 38
1.5.2 Operators manual . . . 38
1.5.3 Wiper mirror . . . 38
1.5.4 Door handle . . . 38
1.5.5 Fall off hazard . . . 39
1.5.6 Park brake . . . 39
1.5.7 Installation date . . . 39
1.5.8 Alternate exit . . . 39
1.6 Hydraulic safety signs . . . 40
1.6.1 Transmission gauge . . . 41
1.6.2 Transmission oil fill level . . . 41
1.6.3 Hydraulic fill . . . 41
1.6.4 Hydraulic couplers . . . 41
1.6.5 Transmission oil fill . . . 42
1.6.6 Transmission / hydraulic oil filter . . . 42
1.6.7 Hydraulic oil filter . . . 42
1.6.8 Oil level . . . 42
1.7 Electrical safety signs . . . 43
1.7.1 Rear terminal mini fuse relay . . . 44
1.7.2 Fuse / relays . . . 44
1.7.3 Electrical hazard . . . 44
1.7.4 Battery explosion . . . 44
1.7.5 12 volt . . . 45
1.7.6 Electrical ground . . . 45
1.7.7 Wire access . . . 45
1.7.8 Battery shut off . . . 45

2 Introduction . . . 47
2.1 Machine identification MT900E . . . 49
2.2 Serial number definition . . . 51
2.3 Intended use . . . 53
2.4 Proper disposal of waste . . . 54
2.5 Pre-Delivery . . . 55
2.5.1 Pre-delivery checklist . . . 55
2.6 Emissions warranty - Tier IV final . . . 56
2.6.1 United States and Canada emission control warranty statement . . . 56
2.6.2 California emission control warranty statement . . . 59

3 Operation . . . 63
3.1 General inspection . . . 67
3.1.1 Walk-around inspection . . . 67

3.2 Starting engine . . . 69
3.2.1 Pre-start checks . . . 69
3.2.2 Engine starting . . . 69
3.2.3 Engine starting in normal conditions . . . 69
3.2.4 Engine starting with jumper cables . . . 70
3.3 Engine start switch . . . 71
3.4 Engine operation with no load or low load . . . 72
3.5 Monitor mounting bar . . . 73
3.6 Lamp switches . . . 74
3.6.1 Multifunction light switch on the steering column . . . 74
3.6.2 Extremity lamps . . . 75
3.6.3 Interior lamps . . . 75
3.6.4 Courtesy lamp . . . 75
3.6.5 Cab switches . . . 76
3.6.6 Exterior courtesy lamps . . . 77
3.6.7 Lighting shutdown delay . . . 77
3.6.8 Rotating beacon . . . 78
3.6.9 Backlighting for switches in the cab . . . 78
3.7 Dash panel . . . 79
3.8 Steering wheel . . . 82
3.8.1 Horn . . . 82
3.8.2 Steering wheel tilt lever . . . 82
3.9 Mirrors . . . 83
3.9.1 Inside rear view mirror . . . 83
3.9.2 Outside rear view mirrors . . . 83
3.10 Radio . . . 84
3.10.1 Blue tooth microphone . . . 84
3.11 Storage and literature compartments . . . 85
3.12 Operator seat . . . 86
3.12.1 Armrest adjustment . . . 86
3.12.2 Standard operator seat . . . 86
3.12.3 Deluxe heated - vented seat . . . 88
3.12.4 Instructor seat . . . 90
3.12.5 Seat belts . . . 90
3.12.6 Operator presence functionality . . . 91
3.13 Storage compartment and tool box . . . 92
3.14 Heating and air conditioning controls . . . 93
3.14.1 Automatic temperature controls . . . 93
3.14.2 Manual temperature control system . . . 94
3.15 Vent locations . . . 95
3.16 Machine management center . . . 96
3.16.1 Terminal . . . 96
3.16.2 Machine management center version information . . . 97
3.16.3 Setting the measurement units . . . 97
3.16.4 Setting the language . . . 99
3.16.5 Setting the decimal display . . . 100
3.16.6 Set the time and date . . . 100
3.16.7 Terminal settings . . . 101
3.16.8 Applications . . . 103
3.16.9 Selecting an auxiliary input . . . 104
3.16.10 Viewing screens . . . 105
3.16.11 Engine . . . 105
3.16.12 Transmission . . . 107
3.16.13 Hydraulic . . . 108
3.16.14 Powertrain protection software (PPS) . . . 109

3.16.15 Measure INST (instantaneous) . . . 109
3.16.16 Measures - field . . . 110
3.16.17 Measures - fuel . . . 111
3.16.18 Memory . . . 111
3.16.19 Power management . . . 114
3.16.20 Tractor settings . . . 115
3.16.21 Slip alarm . . . 116
3.16.22 ISO 11783 Class 3 . . . 117
3.16.23 Service intervals . . . 118
3.16.24 Headland management . . . 122
3.16.25 Headland management icon identification . . . 125
3.16.26 DTC (diagnostic trouble codes) stored or active . . . 127
3.16.27 3-point linkage . . . 128
3.16.28 Slip calibration . . . 130
3.16.29 Inching pedal calibration . . . 132
3.16.30 Radar calibration . . . 133
3.16.31 Enabling the video camera - software version 3.2 and before . . . 135
3.17 Air system operation . . . 136
3.17.1 Air system operation . . . 136
3.17.2 Air hose connection . . . 136
3.18 Machine control . . . 137
3.18.1 Throttle control . . . 137
3.18.2 Decelerator - if equipped . . . 137
3.18.3 Power management . . . 137
3.18.4 Differential lock - if equipped . . . 138
3.18.5 Transmission control . . . 138
3.18.6 Machine ground speeds . . . 139
3.18.7 Transmission control lever . . . 139
3.18.8 Transmission shifting diagram . . . 140
3.18.9 Preselecting a gear before moving . . . 140
3.18.10 Using of the inching clutch control . . . 140
3.18.11 Operating the shuttle shift . . . 141
3.18.12 Speed matching . . . 141
3.18.13 Inching pedal control . . . 142
3.18.14 Brake control . . . 142
3.18.15 Service brakes . . . 143
3.18.16 Hydraulic trailer brake if equipped . . . 143
3.18.17 Park brake . . . 144
3.18.18 Manual parking brake handle . . . 144
3.19 Overweight protection strategy (OWPS) . . . 146
3.20 Hydraulic controls . . . 147
3.20.1 Hydraulic control valve operation . . . 147
3.20.2 Roading lockout switch for the hydraulic control levers . . . 149
3.21 General hydraulic connections . . . 150
3.21.1 General hydraulic connections . . . 150
3.21.2 Connecting the hoses to the quick couplers . . . 150
3.21.3 Disconnecting the hoses from the quick couplers . . . 151
3.21.4 Hydraulic flow management . . . 151
3.21.5 Hydraulic motors . . . 151
3.21.6 Selection of hydraulic motors . . . 151
3.21.7 Single acting cylinders . . . 152
3.21.8 Checking a double acting cylinders . . . 152
3.21.9 Connecting hydraulic motors to the control valves . . . 152
3.21.10 Connecting a grain cart with an auger motor . . . 153
3.21.11 Semi - mounted vacuum planter with the lift assist wheels . . . 154
3.21.12 Connecting the vacuum planter . . . 155
3.21.13 Connecting the air seeder or the grain drill . . . 155

3.21.14 Connecting the spray system pump . . . 157
3.21.15 Connecting the auxiliary implement controls . . . 157
3.21.16 Hydraulic power beyond . . . 158
3.21.17 Connecting a hydraulic motor to power beyond . . . 158
3.21.18 Connecting the auxiliary implement control valve with load sensing . . . 159
3.21.19 Connecting the auxiliary implement control valve without load sensing . . . 159
3.21.20 Auxiliary implement control valve bank . . . 159
3.21.21 Connecting the hydraulic motor with the flow control valve . . . 160
3.22 Electrical system . . . 161
3.22.1 Radar unit . . . 161
3.22.2 Radar connector . . . 161
3.22.3 Battery disconnect switch . . . 162
3.22.4 Single pole connectors . . . 162
3.22.5 Auxiliary power switch . . . 162
3.22.6 Trailer connector . . . 163
3.22.7 Routing the implement cable . . . 163
3.22.8 ISO 11783 connector . . . 163
3.23 Machine performance . . . 165
3.24 Towing and transportation . . . 166
3.24.1 Roading the machine . . . 166
3.24.2 Roading with a 3-point linkage mounted implement . . . 167
3.24.3 Basic towing . . . 167
3.24.4 Towing a stuck machine . . . 168
3.24.5 Towing a machine with a dead engine . . . 168
3.24.6 Accumulator without pressure . . . 169
3.24.7 Transporting the machine . . . 170
3.25 3-point linkage . . . 171
3.25.1 Connecting the implement to the 3-point linkage . . . 171
3.25.2 Disconnecting the implement from the 3-point linkage . . . 171
3.25.3 Connecting the implement to the quick hitch . . . 171
3.25.4 Disconnecting the implement from the quick hitch . . . 173
3.25.5 Console controls . . . 173
3.25.6 3-point linkage . . . 173
3.25.7 Adjusting the 3-point linkage control lever . . . 174
3.25.8 Raise/lower switch for the 3-point linkage . . . 175
3.25.9 External 3-point linkage switch . . . 175
3.25.10 Implement leveling . . . 175
3.25.11 Adjusting the top link . . . 176
3.25.12 Adjusting the draft arm . . . 176
3.25.13 Lift linkages and quick hitch . . . 176
3.25.14 Setting the 3-point linkage side sway . . . 177
3.26 Drawbar . . . 179
3.26.1 Drawbar . . . 179
3.26.2 Connecting drawbar implements . . . 179
3.26.3 Safety chain . . . 180
3.26.4 Adjusting the drawbar position . . . 181
3.26.5 Replacing the wear plates and the rubber stops on the standard drawbar . . . 181
3.27 Implement drive system . . . 182
3.27.1 Operating the power take-off . . . 182
3.27.2 Power take-off shaft . . . 183
3.27.3 Connecting the power take-off implements . . . 183
3.28 Ballasting . . . 184
3.28.1 Ballasting guide lines . . . 184
3.28.2 General guide lines . . . 184
3.28.3 Tire pressure . . . 184
3.28.4 Power hop control . . . 184
3.28.5 Ballasting recommendations for the special application machine . . . 185

3.28.6 Weight splits . . . 185
3.28.7 Ballasting packages . . . 185
3.28.8 Heavy vertical hitch loads . . . 187
3.28.9 Ballasting work sheet . . . 189
3.28.10 Tire inflation guide . . . 192
3.28.11 Calculating wheel slippage for machines without a speed sensor . . . 196
3.28.12 Removing the front weights . . . 197
3.28.13 Installing the front weights . . . 199
3.28.14 Removing the wheel weights . . . 202
3.28.14.1 227 kg (500 lb) . . . 202
3.28.14.2 364 kg (800 lb) . . . 204
3.28.15 Installing the wheel weights . . . 204
3.28.15.1 227 kg (500 lb) . . . 204
3.28.15.2 364 kg (800 lb) . . . 205
3.29 Special applications . . . 208
3.29.1 Special applications drawbars and hitches . . . 208
3.29.2 Ballasting for towed scrapers . . . 208
3.29.3 Hydraulic connections for the towed scraper . . . 208
3.29.4 Towed scraper general guide lines . . . 209
3.29.5 Loading the scraper . . . 209
3.29.6 Loading the tandem scraper . . . 210
3.29.7 Hauling the scraper . . . 210
3.29.8 Dumping the scraper . . . 210
3.29.9 Towing a stuck scraper . . . 210
3.30 Aftermarket equipment applications . . . 211
3.30.1 Chemical tank attachment . . . 211

4 Maintenance . . . 213
4.1 Lubricant viscosities and refill capacities . . . 215
4.1.1 Lubricant viscosities for ambient temperatures . . . 215
4.1.2 Lubricant viscosities . . . 215
4.1.3 Fill capacities . . . 215
4.2 Service intervals . . . 216
4.2.1 Maintenance chart . . . 216
4.2.2 Maintenance schedule . . . 217
4.3 Fuse panel . . . 219
4.3.1 Main fuse panel . . . 219
4.3.2 Fuse block one . . . 220
4.3.3 Fuse block two . . . 221
4.3.4 Fuse relay block one . . . 222
4.3.5 Fuse relay block two . . . 223
4.3.6 Relay and fuse panel for chassis . . . 223
4.3.7 Main fuse . . . 224
4.4 Engine . . . 225
4.4.1 Checking the engine oil level . . . 225
4.4.2 Changing the engine oil and oil filter . . . 226
4.4.2.1 Inspecting used filters . . . 228
4.4.3 Engine oil sample port . . . 228
4.4.4 Engine belts . . . 228
4.4.5 Replacing the engine air filter . . . 229
4.4.6 Engine temperature . . . 229
4.4.7 Opening the engine cover . . . 230
4.5 Fuel system . . . 231
4.5.1 Filling the fuel system . . . 231
4.5.2 Prevent static discharge when fueling . . . 232
4.5.3 Changing the prefilter and the fuel filters . . . 232
4.5.4 Priming the fuel system . . . 233

4.5.5 Draining water and sediment from the fuel tank . . . 234
4.5.6 Fuel cap . . . 235
4.5.7 Fuel tank breather . . . 235
4.6 SCR system . . . 236
4.6.1 Selective catalytic reduction (SCR) System . . . 236
4.6.2 Supply module . . . 236
4.6.3 Filling a diesel exhaust fluid tank . . . 237
4.6.4 DEF storage and shelf life . . . 237
4.7 Cooling system . . . 238
4.7.1 Cleaning the cooling cores . . . 238
4.7.2 Water valve shutoff . . . 238
4.7.3 Checking the engine coolant level . . . 239
4.7.4 Coolant sample . . . 239
4.7.5 Coolant system fluid . . . 239
4.7.6 Cooling system additives . . . 240
4.7.7 Draining the engine coolant . . . 240
4.7.8 Flushing the cooling system . . . 241
4.7.9 Refilling the cooling system . . . 241
4.7.10 Replacing the water temperature thermostat . . . 242
4.8 Power train . . . 243
4.8.1 Checking the power train fluid level - daily . . . 243
4.8.2 Checking the power train system fluid level - 400 hours . . . 243
4.8.3 Adding power train system fluid . . . 244
4.8.4 Draining excess power train system fluid . . . 244
4.8.5 Changing the power train system fluid . . . 245
4.8.6 Cleaning the breather (transmission) . . . 249
4.9 Implement and steering hydraulic system . . . 250
4.9.1 Checking the implement and steering system fluid level . . . 250
4.9.2 Changing the implement and steering system fluid . . . 250
4.9.3 Cleaning the breather (hydraulic reservoir) . . . 253
4.10 Cab filtration . . . 254
4.10.1 Primary fresh air filter . . . 254
4.10.2 Removing the primary air filter . . . 254
4.10.3 Filter maintenance . . . 254
4.10.4 Cleaning the filter . . . 255
4.10.5 Installing the primary air filter . . . 255
4.10.6 Recirculation filter . . . 255
4.10.7 Removing the recirculation filter . . . 256
4.10.8 Installing the recirculation filter . . . 256
4.11 Locking the articulation joint area . . . 258
4.12 Grease point locations . . . 259
4.12.1 Drivelines grease point locations . . . 259
4.12.2 Steering cylinders grease point locations . . . 259
4.12.3 Upper articulation grease point location . . . 260
4.12.4 Lower articulation pin grease point location . . . 260
4.12.5 Extremity arm pivots grease point locations . . . 261
4.12.6 Power take-off grease point locations . . . 261
4.13 Wheels . . . 262
4.13.1 Wheel removal . . . 262
4.13.2 Removing the outside wheel . . . 262
4.13.3 Removing the center wheel . . . 263
4.13.4 Removing the inside wheel . . . 264
4.13.5 Wheel installation . . . 266
4.13.6 Installing the inside wheel . . . 266
4.13.7 Installing the center wheel . . . 269
4.13.8 Installing the outside wheel . . . 272
4.13.9 Re-torque the wheel and counterweight . . . 273

4.14 Hub and collet . . . 274
4.14.1 Removing the hub and collet . . . 274
4.14.2 Installing the hub and collet . . . 274
4.14.3 Hub spacing . . . 276
4.15 Batteries . . . 278
4.15.1 Removing the batteries . . . 278
4.15.2 Installing the batteries . . . 280

5 Troubleshooting . . . 283
5.1 Heating and air conditioning troubleshooting . . . 285
5.1.1 Retrieving diagnostic information from the automatic temperature control unit . . . 285
5.2 Electrical system troubleshooting . . . 288
5.3 Brake troubleshooting . . . 289
5.4 Engine troubleshooting . . . 291
5.4.1 Low diesel exhaust fluid (DEF)/AdBlue® level . . . 296
5.5 Hydraulic troubleshooting . . . 297
5.6 3-point linkage troubleshooting . . . 299
5.7 Transmission troubleshooting . . . 301
5.8 Auto-Guide troubleshooting . . . 303
5.8.1 Auto-Guide ready indicator is not on . . . 303
5.8.2 Auto-Guide ready indicator is on . . . 304
5.8.3 Auto-Guide de-activates during operation . . . 304
5.9 Machine Error Codes . . . 306
5.9.1 Engine error codes . . . 306
5.9.2 Transmission error codes . . . 308
5.9.3 PVED error codes . . . 313
5.9.4 Armrest ECM error codes . . . 314
5.9.5 Auxiliary valve one ECM error codes . . . 318
5.9.6 Auxiliary valve two ECM error codes . . . 318
5.9.7 Auxiliary valve three ECM error codes . . . 318
5.9.8 Auxiliary valve four ECM error codes . . . 319
5.9.9 Auxiliary valve five ECM error codes . . . 319
5.9.10 Auxiliary valve six ECM error codes . . . 320
5.9.11 Front lighting ECM error codes . . . 320
5.9.12 Roof lighting ECM error codes . . . 321
5.9.13 Rear lighting ECM error codes . . . 321

6 Specifications . . . 323
6.1 Engine specifications - MT900E . . . 325
6.2 Torque specifications . . . 326
6.2.1 Constant torque hose clamps . . . 326
6.3 Machine dimensions MT900E . . . 327
6.4 Machine specifications . . . 330
6.4.1 Machine specifications MT900E . . . 330
6.4.2 Shipping weights MT900E . . . 332
6.5 Special tools . . . 334
6.5.1 Collet torque wrench extension AG332273 . . . 334
6.5.2 Spacer torque wrench extension AG332274 . . . 335
6.5.3 Single wheel bolt wrench AG332275 . . . 337
6.5.4 Wheel bolt 36 mm wrench AG332272 . . . 339
6.5.5 Wheel guide stud AG332311 . . . 340

7 Index . . . 341

1. Safety

1.1 Safety information . . . 13
1.1.1 Operator Manual . . . 13
1.1.2 Important safety information . . . 13
1.1.3 Safety symbol . . . 14
1.1.4 Safety messages . . . 14
1.1.5 Information messages . . . 14
1.1.6 Safety signs . . . 14
1.1.7 General hazard information . . . 15
1.1.8 Pressurized air . . . 16
1.1.9 Asbestos information . . . 16
1.1.10 Electrical storm injury prevention . . . 16
1.1.11 Mounting and dismounting the machine . . . 16
1.1.12 Before starting the engine . . . 17
1.1.13 Engine starting . . . 17
1.1.14 Before operation . . . 17
1.1.15 Operating procedures . . . 17
1.1.16 Parking . . . 18
1.1.17 Operator station . . . 18
1.1.18 Cut and crushing prevention . . . 19
1.1.19 Rollover protective structure . . . 19
1.1.20 Batteries . . . 20
1.1.21 Burn prevention . . . 21
1.1.22 Coolant . . . 21
1.1.23 Oils . . . 21
1.1.24 High pressure lines . . . 21
1.1.25 Fluid penetration . . . 22
1.1.26 Exhaust fumes . . . 22
1.1.27 Noise prevention . . . 23
1.1.28 Fire and explosion prevention . . . 23
1.1.29 Fire extinguisher . . . 24
1.1.30 Public road transportation . . . 24
1.2 Safety signs and labels . . . 25
1.3 Engine safety signs . . . 26
1.3.1 Engine oil filter . . . 27
1.3.2 Belt routing . . . 27
1.3.3 Informational - cab air conditioning . . . 27
1.3.4 Separator filter . . . 27
1.3.5 Fuel filter . . . 28
1.3.6 Hot surface . . . 28
1.3.7 High pressure hazard . . . 28
1.3.8 Entanglement . . . 29
1.3.9 Entanglement . . . 29
1.3.10 Run over hazard . . . 29
1.3.11 Fuel filter . . . 29
1.3.12 Separator filter . . . 30
1.3.13 Informational - engine air cleaner . . . 30
1.3.14 Engine oil filter . . . 30
1.3.15 Ether . . . 30
1.3.16 Hot pressurized coolant . . . 31
1.3.17 Engine oil sign . . . 31
1.3.18 No step . . . 31

1.4 Chassis safety signs 32
1.4.1 Grease points 33
1.4.2 Engine cover support 33
1.4.3 Radiation hazard 33
1.4.4 Ultra low sulfur diesel fuel 33
1.4.5 Tiedown 34
1.4.6 Lift 34
1.4.7 Articulation lock 34
1.4.8 Pinching hazard 34
1.4.9 Fall hazard 35
1.4.10 Crush hazard 35
1.4.11 Rear rollover hazard 35
1.4.12 Power take off 35
1.4.13 No step 36
1.5 Cab safety signs 37
1.5.1 Bystander notification 38
1.5.2 Operators manual 38
1.5.3 Wiper mirror 38
1.5.4 Door handle 38
1.5.5 Fall off hazard 39
1.5.6 Park brake 39
1.5.7 Installation date 39
1.5.8 Alternate exit 39
1.6 Hydraulic safety signs 40
1.6.1 Transmission gauge 41
1.6.2 Transmission oil fill level 41
1.6.3 Hydraulic fill 41
1.6.4 Hydraulic couplers 41
1.6.5 Transmission oil fill 42
1.6.6 Transmission / hydraulic oil filter 42
1.6.7 Hydraulic oil filter 42
1.6.8 Oil level 42
1.7 Electrical safety signs 43
1.7.1 Rear terminal mini fuse relay 44
1.7.2 Fuse / relays 44
1.7.3 Electrical hazard 44
1.7.4 Battery explosion 44
1.7.5 12 volt 45
1.7.6 Electrical ground 45
1.7.7 Wire access 45
1.7.8 Battery shut off 45

1.1 Safety information

1.1.1 Operator Manual

This operator manual uses the latest information available at the time of publication. Read the operator manual carefully before operating the machine.

Right-hand and left-hand, as used in the operator manual, is determined by facing the direction that the machine travels when in use.

Photos, illustrations, and data used in the operator manual were current at the time of publishing. Because of possible production changes, each machine can vary. Manufacturer reserves the right to redesign and change the machine as necessary without notification.

1.1.2 Important safety information

IMPORTANT: *Any Modifications to the machine or systems not authorized by AGCO will void the AGCO Warranty. This includes, but is not limited to hitches.*



WARNING:
When replacement parts are required for this product, AGCO recommends using AGCO replacement parts or parts with equivalent specifications including, but not limited to, physical dimensions, type, strength and material. Failure to heed this warning can get untimely failures, product damage, personal injury or death.

Failure to obey basic safety rules and precautions can cause personal injuries during product operation, maintenance, or repair. Know dangerous situations before an injury occurs.

A person must be alert to possible dangers. This person must also have the necessary training, skills and tools to do these operations correctly.

Incorrect operation, lubrication, maintenance or repair of this product can be dangerous and can result in injury or death.

Read and understand all the information about the operation, lubrication, maintenance, and repair before operating on this machine.

The product and this manual give safety precautions and warnings. Bodily injury or death can occur to you or to other persons if all warnings are not heeded.

Not every possible circumstance that can involve a potential danger can be anticipated. The warnings in this publication and on the product are, thus, not all inclusive. If a tool or procedure, not recommended by AGCO, is used, make sure they are safe for everyone.

An operator must make sure the product will not be dangerous or damaged by the operation, lubrication, maintenance or repair procedures selected. Information, specifications, and illustrations in this publication come from information available at the time of publication production.

Specifications, torques, pressures, measurements, adjustments, illustrations, and other items can change at any time. These changes can change the service that is given to the product. Get the complete and most current information before starting a job. AGCO dealers have the most current information available.

1.1.3 Safety symbol

The safety symbol tells you about a dangerous area!

Look for the safety symbol in this manual and on the machine. The safety symbols tell you that there is important safety instructions in the manual.



Fig. 1

1.1.4 Safety messages

The words DANGER, WARNING or CAUTION are used with the safety symbol. Learn these safety messages and obey the recommended precautions and safety instructions.



DANGER:
If you do not obey the recommended precautions and safety instructions, DEATH OR INJURY will occur.



WARNING:
If you do not obey the recommended precautions and safety instructions, DEATH OR INJURY can occur.



CAUTION:
If you do not obey the recommended precautions and safety instructions, INJURY can possibly occur.



Fig. 2

1.1.5 Information messages

The words important and note are not related to personal safety, and are used to give information about the operation and servicing of the machine.

IMPORTANT: *Identifies special instructions or procedures which, if not followed, can cause damage to the machine, the process, or the area around the machine.*

NOTE: *Information to make procedures easier.*

1.1.6 Safety signs



WARNING:

Do not remove the safety signs. Replace safety signs that you cannot read, are damaged, or are missing. Clean the machine surface with a weak soap and water solution before you replace the safety signs. Replacement safety signs are available from your dealer.

Always make sure that safety signs are in the correct locations and that you can read the safety signs. Illustrations of safety sign locations are at in this section.

Keep the safety signs clean. If necessary, use a weak soap and water solution.

1.1.7 General hazard information

CAUTION:
Carefully read the operator's manual before operating the machine. See all instructions and safety rules when operating or doing maintenance.



Fig. 3

Do not start the engine until the area is free of personnel. Honk the horn two times to alert others. This will help in avoiding personal injury because machine movement can occur.

Know the width of the equipment to keep correct clearance when operating the machine near fences or near boundary obstacles.

Wear a hard hat, protective glasses, and other protective equipment, as required.

Do not wear loose clothing or jewelry that can catch on controls or on other parts of the machine.

Make sure that all protective guards and all covers are attached in position on the machine.



Fig. 4

Keep the machine free from unwanted material. Remove debris, oil, tools, and other items from the deck, from walkways, and from steps.

Secure lunch boxes, tools, and other loose items that are not a part of the machine.

Know the appropriate work location hand signals and the personnel that are authorized to give the hand signals. Get hand signals from one person only.

Never put maintenance fluids into glass containers. Drain all liquids into an approved container.

Discard any drained fluids and discard any filter elements according to local regulations.

Use all cleaning solutions with precaution.

Report all necessary repairs.

Do not let untrained or not approved personnel on the machine.

Do not smoke when servicing an air conditioner. Also, do not smoke if refrigerant gas can be present. Inhaling the fumes that are released from a flame that contacts air conditioner refrigerant can cause bodily harm or death.

Inhaling gas from air conditioner refrigerant through a lighted cigarette can cause bodily harm or death.

Unless being instructed differently, complete the maintenance under the following conditions:

- Turn the battery disconnect switch to "off" position.
- The machine is parked on level ground.
- Implements are lowered to the ground.
- Transmission control lever is in the park position.
- The engine is stopped.
- The engine start switch is turned off and the switch key is removed.
- The machine has cooled down.

Any additional precautions must be observed based on the conditions and environment where the machine is being used.

1.1.8 Pressurized air

Air under pressure can cause personal injury. When pressurized air is used for cleaning, wear a protective face shield, protective clothing and protective shoes.

The maximum air pressure for cleaning purposes must be below 205 kPa (30 psi).

1.1.9 Asbestos information

AGCO equipment and replacement parts are asbestos free. AGCO recommends the use of only correct AGCO replacement parts.

1.1.10 Electrical storm injury prevention

When lightning is striking in the vicinity of the machine, the operator should not attempt to dismount or mount the machine.

If you are in the operator's station during an electrical storm, stay in the operator's station. If you are on the ground during an electrical storm, stay away from the machine.

1.1.11 Mounting and dismounting the machine

Mount the machine and dismount the machine only at locations that have steps and/or hand holds. Before mounting the machine, clean the steps and the hand holds. Inspect the stairs and hand holds. Make any necessary repairs.

When dismounting the machine, descend the steps backwards, and maintain a three-point contact with the steps and hand holds. Three-point contact is two feet and one hand or one foot and two hands.

Never mount a moving machine. Never dismount a moving machine. Never jump off the machine except in an emergency.

Do not carry tools or supplies when you try to mount the machine or when you try to dismount the machine. Use a hand line to pull equipment onto the platform.

Do not use any controls as hand holds when you enter the operator compartment or when you exit the operator compartment.

1.1.12 Before starting the engine

Start the engine only from the operator compartment. Never short across the starter terminals or batteries. Shorting can damage electrical system or cause unexpected machine movement.

Adjust the seat so full pedal travel can be achieved with operator's back against seat back.

Make sure the machine is equipped with a lighting system sufficient for job conditions. Make sure all machine lights are working properly.

Before starting the engine or moving the machine, make sure no one is under, around or on machine. Make sure area is free of personnel.

To honk horn the key must be turned to “run” to enable the horn. As a warning honk horn twice, to alert others.



Fig. 5

1.1.13 Engine starting

Move all hydraulic controls to the hold position before starting the engine.

Make sure the transmission control lever is in the park position.

Diesel engine exhaust contains products of combustion which can be dangerous. Always operate the engine in a well ventilated area. If in a closed in area, vent the exhaust to the outside.

WARNING:
Machine will turn if turning the steering wheel when the transmission control lever is in neutral and the engine is idling.

WARNING:
Do not use ether at any time. Use will cause engine damage and/or personal injury.

Do not start the engine until the area is free of personnel to prevent personal injury because of unexpected machine movement.

1.1.14 Before operation

Clear all personnel from around the machine and the area.

Clear all obstacles from machine's path. Be careful of dangers, (electrical power lines, ditches, etc).

Make sure all the windows are clean and attached in the closed position.

Adjust the rearview mirrors for best visibility near the machine. Make sure the horn, backup alarm (if equipped) and all other warning devices are working correctly.

On the drawbar-towed implements, fasten a transport chain of sufficient capacity between the machine drawbar support and implement. Give only enough slack in the chain to permit turning.

Only one instructor must be permitted to ride in the machine cab. Instructor must be seated in the instructor seat with the seat belt fastened.

1.1.15 Operating procedures

When the engine is running, the articulated steering is active. The machine will articulate when the transmission is in park, neutral, or in any gear.

Only operate the machine while in the operator's seat. Securely fasten the seat belt while operating the machine. Only operate the controls while the engine is operating.

Check for the correct operation of all the controls and the protective devices.

As a warning honk the horn twice to alert others in the area to prevent personal injury because of machine movement.

During operation of the machine, report any damage recorded. Make any necessary repairs.

A rollover of machine can occur when working on hills, banks, or slopes. A rollover of machine can also occur when crossing ditches, ridges, or other unanticipated obstacles.

Hold the attachments approximately 40 cm (16 in) above the ground level while driving the machine. Do not drive the machine near an overhang, near the edge of a cliff, or near edge of an excavation.

If the machine begins to sideslip on a grade, immediately reduce load and turn machine downhill.

Be careful to avoid any ground condition which will cause machine to tip over.

Keep the machine under control. Do not overload the machine beyond capacity.

Make sure the towing devices are sufficient for the application.

Make sure the components on the 3-point linkage are sufficient for the application.

Connect the trailing equipment only to a drawbar or hitch.

Never straddle a wire cable.

When maneuvering to connect equipment, make sure no personnel are between machine and trailing equipment. Block up hitch of trailing equipment to align equipment with drawbar.

Know the maximum dimensions of the machine.

When operating on icy or muddy roads, reduce the travel speed to prevent losing control of machine.

After operating in muddy conditions, permit sufficient time for tires to reject debris and moisture before making high speed maneuvers. Tires that are wet and tires that are muddy can impede machines's steering.

Reduce travel speed if the stability of the machine is noticeably reduced.

Select a gear that controls machine speed when declining a hill.

Use the service brakes if required, to control machine speed. Never coast down a hill with transmission in neutral.

Do not let passengers anywhere on the machine except on an approved passenger seat. Instructors must have the instructor seatbelt securely fastened during any operation.

1.1.16 Parking

1. Park the machine on a solid, level surface.
2. Move the transmission control lever to the park position.
3. Lower all the implements to the ground.
4. Before stopping the engine, move the throttle control lever to the low idle position. Operate the engine at low idle speed for five minutes to let the turbocharger cool.
5. Stop the engine and take the key with you.
6. Chock the front wheels or rear wheels.
7. Turn the battery disconnect switch to the off position.
8. Remove the battery disconnect switch key.

1.1.17 Operator station

Do not drill holes or weld on the cab rollover protective structure. (ROPS)

Any modifications to the inner operator station must not extend into the operator space.

Any item brought into the cab must not extend into defined operator space. Secure loose items. Objects must not pose an impact hazard in rough terrain or if there is a rollover.

1.1.18 Cut and crushing prevention

Support the equipment correctly when performing work below the equipment. Do not rely on the hydraulic cylinders to hold up the equipment. An implement can fall if a control lever is moved or if a hydraulic line breaks.

Never start the machine engine by shorting across the starter solenoid terminals. Machine movement can occur causing runovers .

Never make adjustments while the machine is moving or while the engine is operating.

Whenever there are attachment control linkages, the clearance in the linkage area will change with movement of the attachment.

Stay clear of all rotating parts and all moving parts.

Keep objects away from moving fan blades. The fan blades will throw objects and the fan blades can cut.

Do not use a wire tow cable that is kinked or frayed. Wear gloves when touching wire cable.

When hitting a retainer pin, the retainer pin can fly out causing personal injury. Make sure that there are no people in the area when hitting a retainer pin. To prevent eye injury, wear protective glasses when hitting a retainer pin.

Chips or other debris can fly off objects when hitting the objects. Make sure that others are clear of the area before hitting any object.

1.1.19 Rollover protective structure

Do not make any modifications to the rollover protective structure (ROPS) as this will change protection provided. Do not change structure by welding, cutting, adding weight, or drilling holes into structure.

Any change not specifically authorized by AGCO invalidates AGCO certification for ROPS. The protection offered by ROPS will be impaired if ROPS has structural damage or alteration. Damage to structure can be caused by a turn over or by falling objects.

Do not mount items (fire extinguishers, first aid kits, work lights, etc.) by welding brackets or drilling holes in ROPS. See dealer for mounting guide lines.



Fig. 6

1.1.20 Batteries

A lead acid battery generates flammable and explosive gases. Keep sparks and flames away from the battery.

WARNING: *WARNING: Sulfuric acid in battery electrolyte is poisonous. The acid is strong enough to burn skin, eat holes in clothing and cause blindness if got into eyes.*

If acid contacts skin or clothing, flush with water immediately. If acid contacts eyes get immediate medical aid.

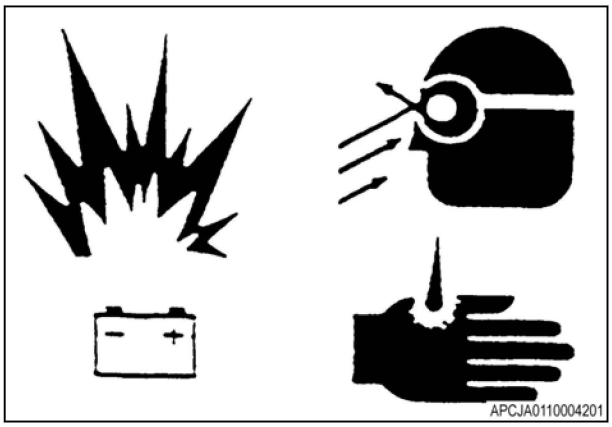

Fig. 7

Wash hands after touching batteries and connectors.

WARNING: *WARNING: Batteries contain electrolyte which is an acid that can cause personal injury. Do not let the electrolyte contact the skin or eyes. Always wear protective glasses for servicing batteries.*

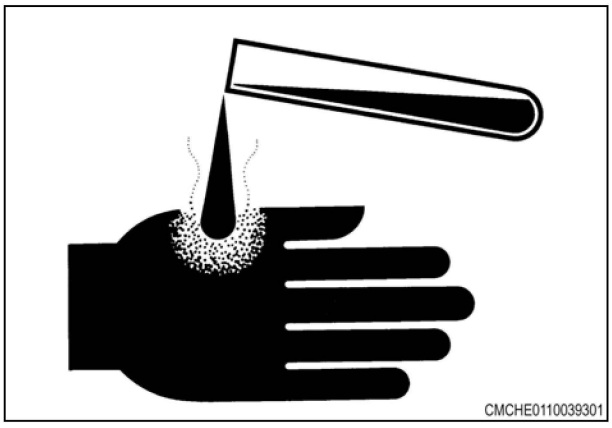

Fig. 8

Never check battery charge by placing a metal object across the terminal posts. Use a voltmeter or a hydrometer.

WARNING: *WARNING: Gases from a battery can explode. Keep open flames or sparks away from the top of the battery. Do not smoke in the battery charging areas.*
Incorrect jumper cable connections can cause an explosion causing an injury.
To prevent an explosion, never charge a frozen battery.

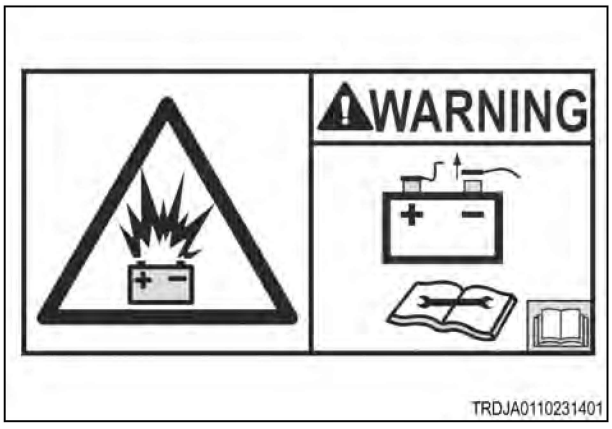

Fig. 9

1.1.21 Burn prevention

Do not touch any part of an operating engine. Other components such as the transmission, the axles and the oil reservoir can also be hot. Let the engine cool before performing any maintenance on the engine. Release all pressure in air, oil, lubrication, fuel and cooling systems before disconnecting any line fittings or related items.



Fig. 10

1.1.22 Coolant

When the engine is at operating temperature, the engine coolant is hot. The coolant is also under pressure. The radiator and all the lines to the heater or engine contain hot coolant.

Any contact with hot coolant or with the steam can cause severe burns. Allow the cooling system components to cool before the cooling system is drained.

Check the coolant level only after the engine has been stopped.

Make sure the filler cap is cool before removing. The filler cap must be cool enough to touch with a bare hand. Remove the filler cap slowly to relieve the pressure.

The cooling system conditioner contains alkali. Alkali can cause personal injury.

Do not allow alkali to contact skin, eyes or mouth.

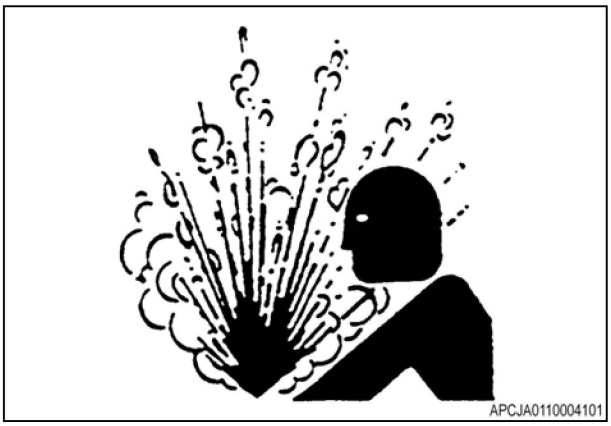

Fig. 11

1.1.23 Oils

Pressurized hot oil and hot components can cause personal injury. Do not allow hot oil to contact skin. Do not allow hot components to contact skin.

Remove the hydraulic tank filler cap only after the engine has been stopped.

The filler cap must be cool enough to touch with a bare hand. Follow the standard procedure in this manual to remove the hydraulic tank and transmission filler caps.

1.1.24 High pressure lines

Do not bend or strike the high pressure lines. Do not install any lines that are bent or damaged.

Repair any loose or damaged lines. Leaks can cause fires. Consult your dealer for repair or for replacement parts.

DANGER:
Diesel fuel or hydraulic fluid under pressure can penetrate the skin or eyes. This can cause serious personal injury, blindness, or death.

1.1.25 Fluid penetration

Always use a board or cardboard when checking for a leak. Leaking fluid under pressure can penetrate the body tissue. Fluid penetration can cause serious injury and possible death. A pin hole leak can cause severe injury. If fluid is injected into the skin, get treatment immediately. Get treatment from a doctor familiar with this type of injury.

Check the lines, the tubes and the hoses carefully. Do not use your bare hand instead, use a board or cardboard to check for leaks. Tighten all connections to the recommended torque.

Replace the hose if any of the following conditions are present:

- End fittings are damaged or leaking.
- Outer coverings are rubbed or cut.
- Wires are showing.
- Outer coverings are ballooning.
- The flexible part of the hose has a kink.
- Outer coverings have embedded armoring.
- The end fittings are displaced.

IMPORTANT: *Take care to contain fluids during the performance of the inspection, the maintenance, the testing, the adjusting, and the repair of the machine. Have a suitable container large enough ready to collect the fluid before opening any compartment or disassembling any component containing fluids. See the local regulations and mandates when discarding fluids.*

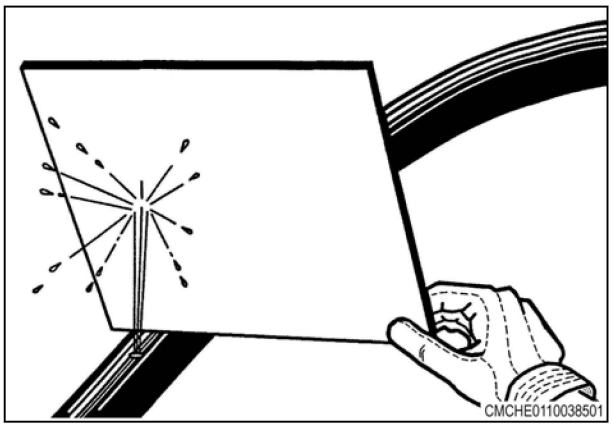

Fig. 12

1.1.26 Exhaust fumes

Always work in a correct ventilated area.

Engine exhaust fumes can cause sickness or death. If necessary to run engine in a closed area, use correct equipment to safely remove exhaust fumes from area.

Always open the doors and get outside air into area.

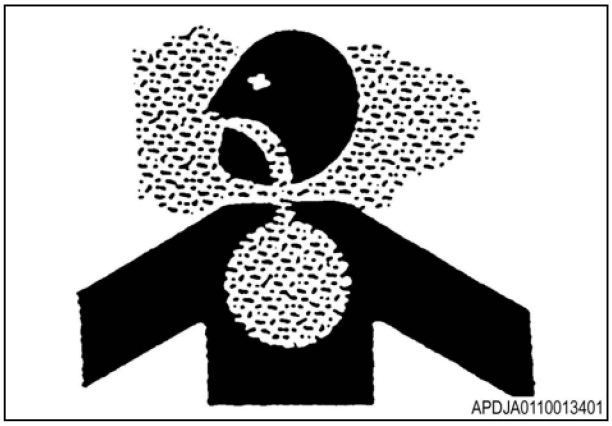

Fig. 13

1.1.27 Noise prevention

Wear proper hearing protective devices such as earmuffs or earplugs to prevent loss of hearing due to high noise levels.

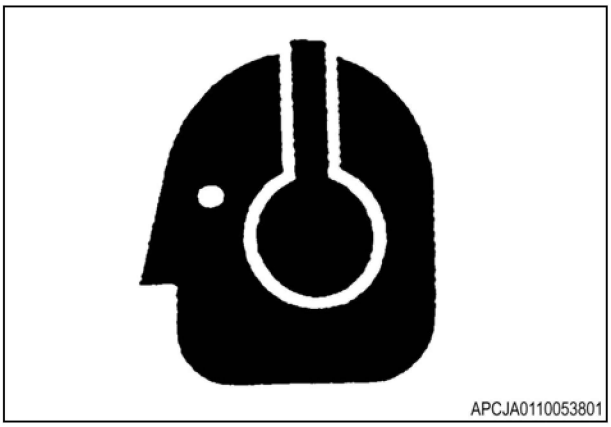

Fig. 14

1.1.28 Fire and explosion prevention

Use caution when refueling a machine. Do not smoke while refueling and do not refuel near open flames or sparks. Always stop engine before refueling. Fill fuel tank outdoors.

All fuels, most lubricants, and some coolant mixtures are flammable.

Flammable fluids leaking or spilled onto hot surfaces or electrical components can cause a fire.

Fire may cause personal injury and property damage.

Remove all flammable materials such as fuel, oil, and debris from machine.

Do not let any flammable materials to accumulate on machine.

Store fuels and lubricants in correctly identified containers away from not approved persons. Store rags with oil and any flammable materials in protective containers.

Do not smoke in areas used for storing flammable materials.

Do not operate machine near any flame.

Do not weld on lines or tanks that contain flammable fluids. Do not flame cut lines or tanks containing flammable fluid. Clean any such lines or tanks fully with a nonflammable solvent before welding or flame cutting.

Check all electrical wires daily. Repair any wires loose or frayed before operating machine. Clean and tighten all electrical connections.

Dust generated from repairing nonmetallic hoods or nonmetallic fenders can be flammable and/or

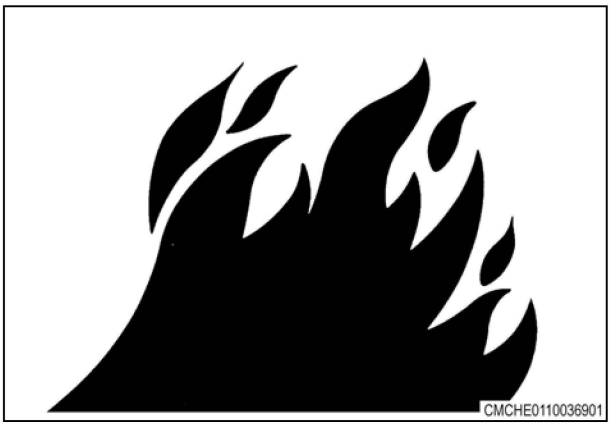

Fig. 15

explosive. Repair such components in a well ventilated area away from open flames or sparks.

Inspect all lines and hoses for wear or for deterioration and replace if necessary.

Route hoses correctly. Lines and hoses must have sufficient support and secure clamps. Tighten all connections to recommended torque.

1.1.29 Fire extinguisher

Make sure that a fire extinguisher is available and be familiar with the operation. Inspect and service the fire extinguisher regularly. Obey the recommendations on the instruction plate.

An optional (1) mounting bracket can be installed on the right front frame rail.

The bracket is designed to hold a 4.5 kg (10 lb)extinguisher.

Do not weld a bracket on the cab ROPS frame to install the fire extinguisher.

Do not drill holes in the cab ROPS frame to mount the fire extinguisher.

Make sure all the clamps , the guards, and the heat shields are installed correctly to prevent vibration, rubbing, and excessive heat during the machine operation.

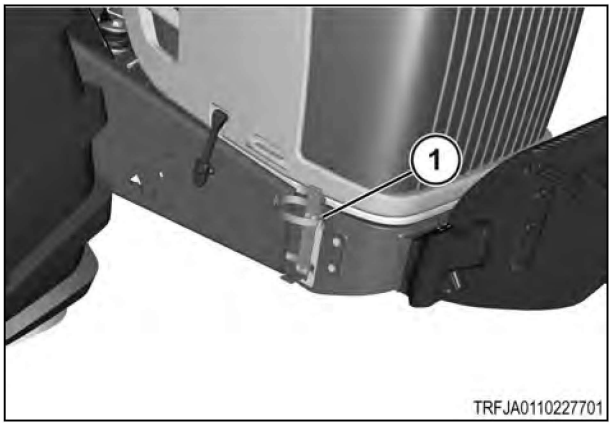

Fig. 16

1.1.30 Public road transportation

Always walk around and visually examine the machine before moving on a public road. As a warning to others in the area, honk the horn two times before starting engine. Do a check for damage and/or defective components that can make a dangerous condition. Make sure all machine systems operate correctly including (but not limited to):

- front road lamps
- tail and brake lamps
- amber hazard lights
- parking brake
- horn
- windshield wiper and washer
- rear view mirrors
- etc.

Repair or replace a component not in correct operating order.

Do not drive at a speed causing machine to lose control.

Obey all traffic rules. Operate the machine with hazard lights on, unless prevented by law. The operation of work lamps while driving on public roads is prohibited. Use of road lamps while moving on public roads is the operator's responsibility.

NOTE:
When the Speed Indication Symbol (SIS) is installed in the rear window, be sure to close the rear window when transporting the machine on the road.

1.2 Safety signs and labels

There are several specific safety signs on this machine. The exact location of the hazards and the description of the hazards are reviewed in this section.

Become familiarized with all of the safety signs. Make sure all of the safety signs are legible. Clean the safety signs or replace the safety signs if you cannot read the words. When cleaning the safety signs, use a cloth, water, and soap. Do not use a solvent, gasoline, or other harsh chemicals. Solvents, gasoline, or harsh chemicals can loosen the adhesive that secures the safety sign. Loose adhesive will allow the safety sign to fall off.

Replace any safety sign that is damaged or missing.

If a safety sign is attached to a part of the machine that is replaced, install a safety sign on the replacement part. Any AGCO dealer can provide new safety signs.

WARNING:
Do not remove or block any safety sign or instruction sign.

1.3 Engine safety signs

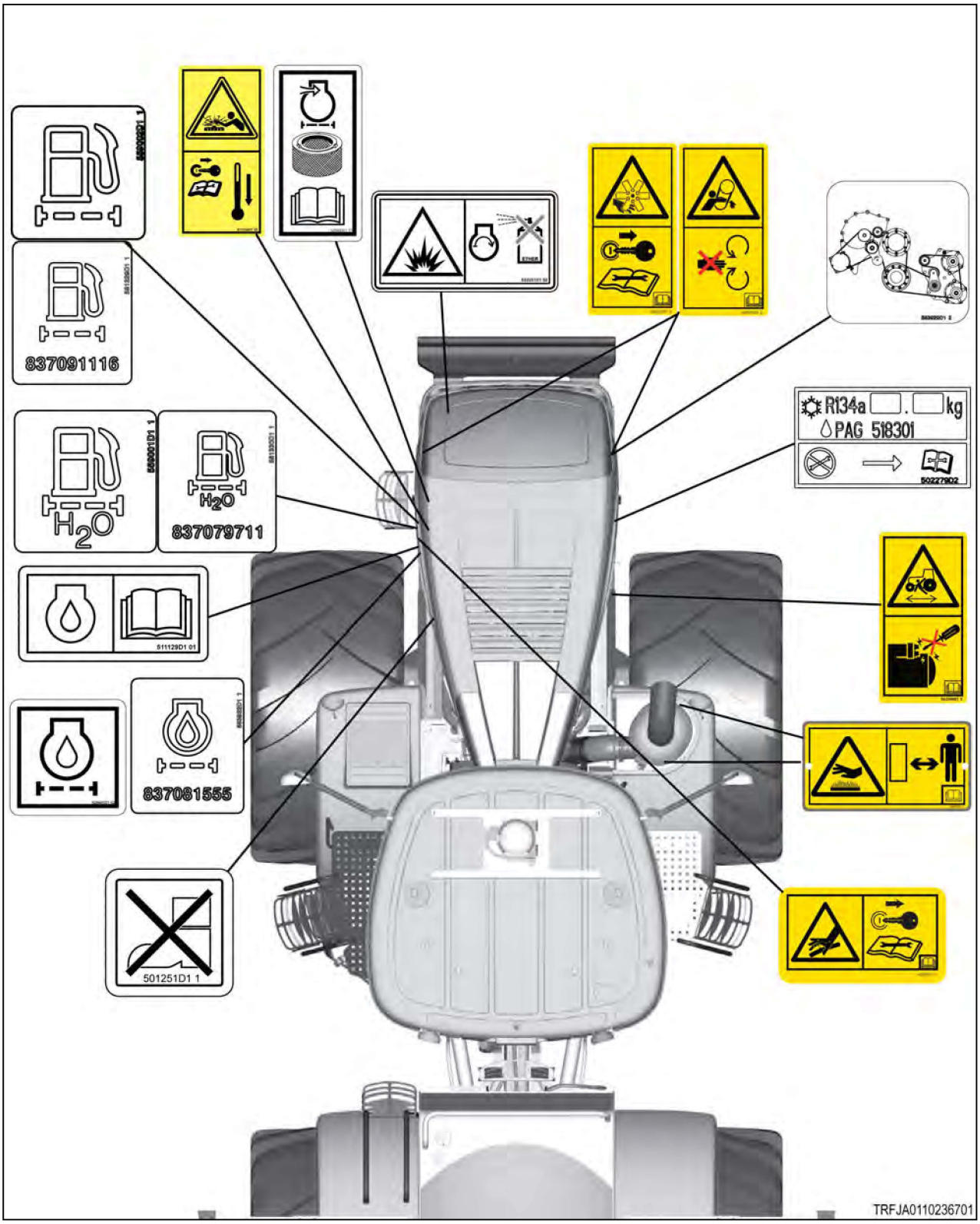

Fig. 17

1.3.1 Engine oil filter

Engine oil filter	
	Change the engine oil filters, as necessary. See the maintenance schedule for the service intervals. Discard the used filters correctly.

1.3.2 Belt routing

Belt routing	
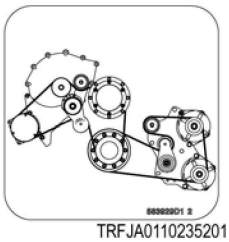	Inspect the belts. Replace the belts if they are worn. Replace the belt if it is cut or penetrated by a foreign object.

1.3.3 Informational - cab air conditioning

Cab air conditioning	
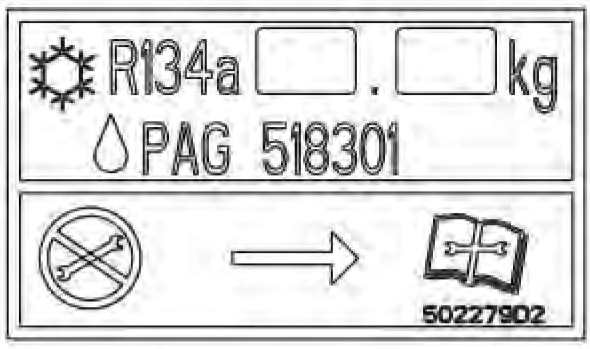	Air conditioning refrigerants realeased into the air can damage the atmosphere. The air conditioning system must be serviced by a certified technician.

1.3.4 Separator filter

Separator filter	
	The separator filter decal shows the location of the sepearator filter.

1.3.5 Fuel filter

Fuel filter	
 TRFJA0110236501	The fuel filter decal shows the location of the fuel filter.

1.3.6 Hot surface

Hot surface	
 TRFJA0110236301	Machine components get hot during operation. Prevent touching hot surfaces. Touching hot surfaces will cause dangerous burns. Do not touch a component until the machine becomes cool.

1.3.7 High pressure hazard

High pressure hazard	
	Prevent contact with high-pressure fluids. Oil leaks can cause a high pressure fluid flow which can go through skin. Use a piece of wood or cardboard to find leaks not hands. Protect hands and body from the high pressure fluids. If spray goes through skin, get immediate medical aid. Never heat by welding, soldering, or using a torch near pressurized fluid lines and or other flammable materials. Let the machine to cool after stopping before checking fluids. Use caution when removing radiator caps, plugs, grease fittings, or pressure taps. Never open pressure lines under pressure. Release all pressure before doing maintenance or repairs on any pressurized system.

1.3.8 Entanglement

Entanglement	
 TRFJA0110235901	Stay out of the engine compartment while the engine is on. Keep all body-parts clear of the fan. Injury or death can occur. Stop the engine and remove the key before maintenance or repair work.

1.3.9 Entanglement

Entanglement	
 TRFJA0110236101	Stay out of the engine compartment while the engine is on. Keep all body-parts clear of the belts. Injury or death can occur. Stop the engine and remove the key before maintenance or repair work.

1.3.10 Run over hazard

Run over	
	Never bypass start the engine by making a connection across the starter terminals. The engine can start and the machine can move if the normal circuits are bypassed. Never start the engine while standing on the ground. Start the engine only from the operator's seat with the seat belt on. The drive lever must be in neutral and the park brake engaged.

1.3.11 Fuel filter

Fuel filter	
	The decal is located on the fuel filter housing.

1.3.12 Separator filter

Separator filter	
 TRFJA0110235601	The separator filter decal shows the location of the sepearator filter.

1.3.13 Informational - engine air cleaner

Engine air cleaner	
 TRDJA0110101001	Change the filters for the engine air cleaner, as necessary. See the information for the engine air cleaner for more information.

1.3.14 Engine oil filter

Engine oil filter	
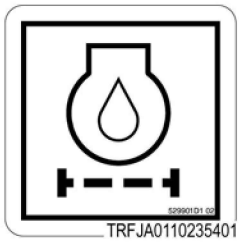 TRFJA0110235401	Change the engine oil filters, as necessary. See the maintenance schedule for the service intervals. Discard the used filters correctly.

1.3.15 Ether

Warning sign - ether		
 APCJA0110058701	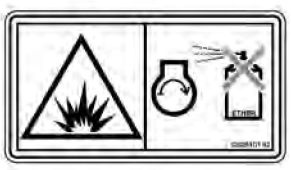 APCJA0110067901	Do not use ether at any time. Ether used as a starting fluid can cause engine damage and/or personal injury.

1.3.16 Hot pressurized coolant

Hot pressurized coolant		
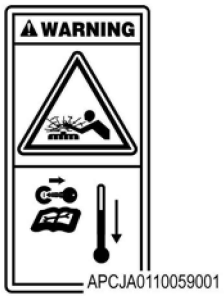 APCJA0110059001	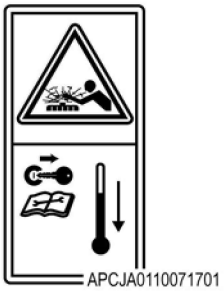 APCJA0110071701	Hot coolant can cause serious burns. Do not open the filler cap for the cooling system until the engine has stopped and the engine components have become cool. Then slowly loosen the filler cap to release the pressure.

1.3.17 Engine oil sign

Engine oil sign	
 TRDJA0110100701	Check the level of the engine oil daily. See the information for checking the engine oil.

1.3.18 No step

No step	
 APCJA0110058401	Do not use this location as a step.

1.4 Chassis safety signs

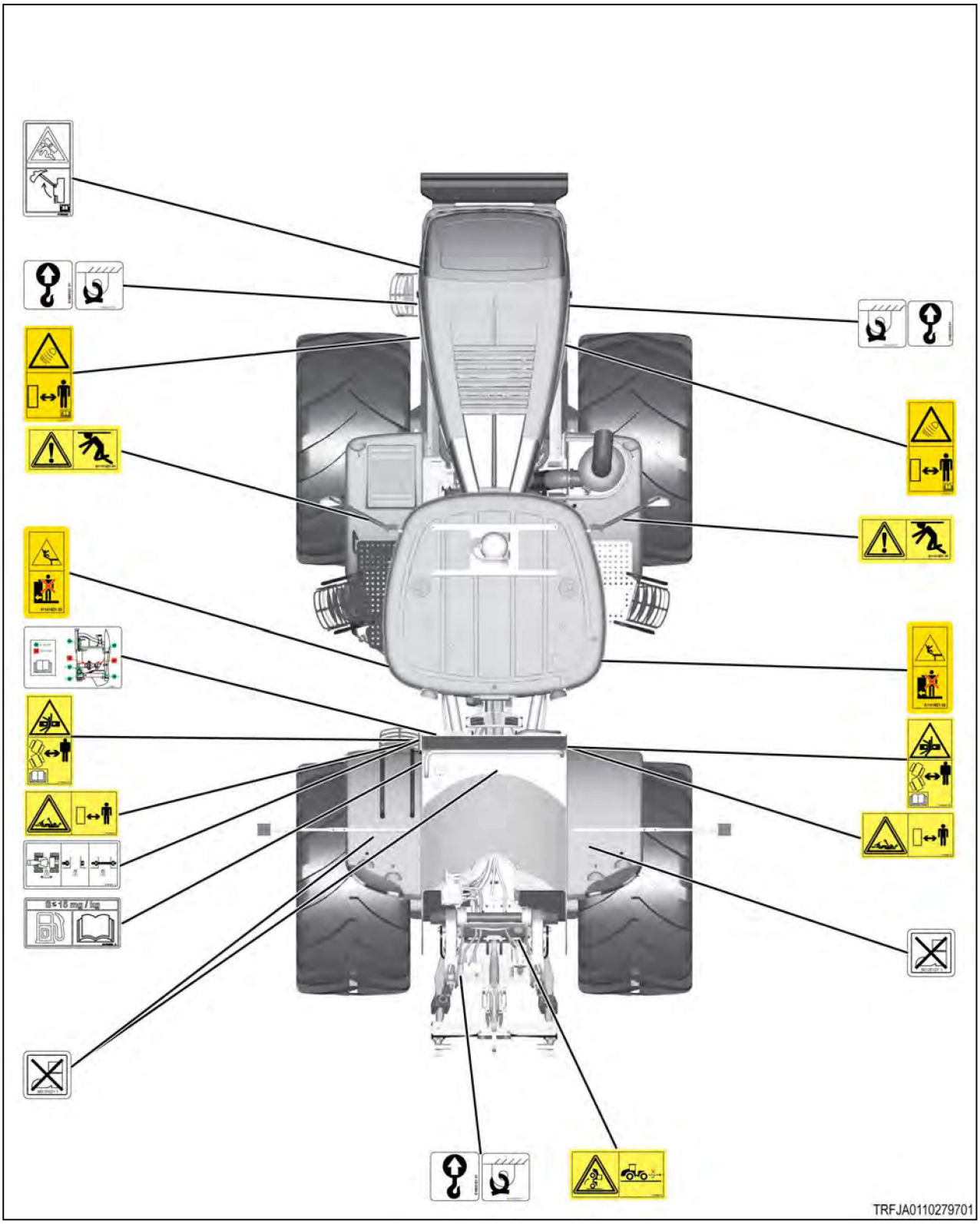

Fig. 18

1.4.1 Grease points

Grease points	
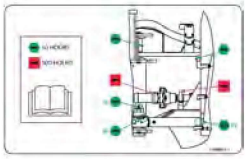 TRFJA0110248201	The decal shows the location and the intervals of the grease points.

1.4.2 Engine cover support

Engine cover support		
 TRFJA0110262601	 TRFJA0110262501	Closing the engine cover creates a pinch point that can cause serious bodily injury. Securely prop open the engine cover.

1.4.3 Radiation hazard

Radiation hazard	
 TRFJA0110263101	Do not look directly into the face of the ground speed sensor while in operation. Low intensity microwave signals from the ground speed sensor can cause eye injury.

1.4.4 Ultra low sulfur diesel fuel

Ultra low sulfur fuel only		
	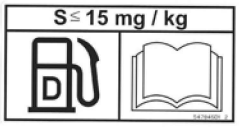	Decal is located by the fuel inlet. Use only low sulfur diesel fuel.

1.4.5 Tiedown

Tiedown	
	Located next to circular openings in the frame; near the rear of the frame and the front of the frame on both sides of the machine.

1.4.6 Lift

Lift	
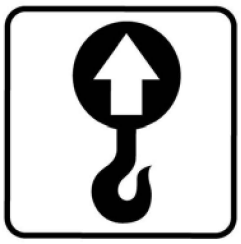	Located next to the circular openings in the frame; near the rear of the frame and the front of the frame on both sides of the machine.

1.4.7 Articulation lock

Articulation lock	
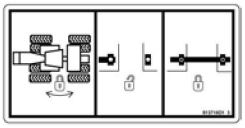 TRFJA0110248301	The decal shows the location for the articulation lock

1.4.8 Pinching hazard

Pinching hazard		
 TRFJA0110262901	 TRFJA0110262801	Pinch point Stay clear of this area while engine and machine are operating.

1.4.9 Fall hazard

Fall hazard		
 TRFJA0110262101	 TRFJA0110262201	To avoid personal injury or death, do not allow anyone to ride on any part of the machine or any attached equipment

1.4.10 Crush hazard

Crush hazard		
 TRFJA0110261401	 TRFJA0110248401	Whole body crushing hazard. Stay clear of the area while the engine and machine are operating.

1.4.11 Rear rollover hazard

Rear rollover hazard		
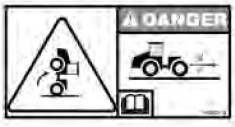	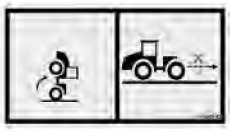	The safety sign is located on the rear of the machine. Pull only with the drawbar. Pulling from any other point can cause a roll over.

1.4.12 Power take off

Power Take Off	
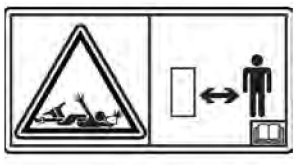 APCJA0110064601	The safety sign is located on each side of the PTO shaft. To avoid personal injury due to entanglement with the rotating shaft, keep the PTO master cover and all the power drive system covers in place. Install the PTO shaft guard when the system is not in use.

1.4.13 No step

No step	
	Do not use this location as a step.

1.5 Cab safety signs

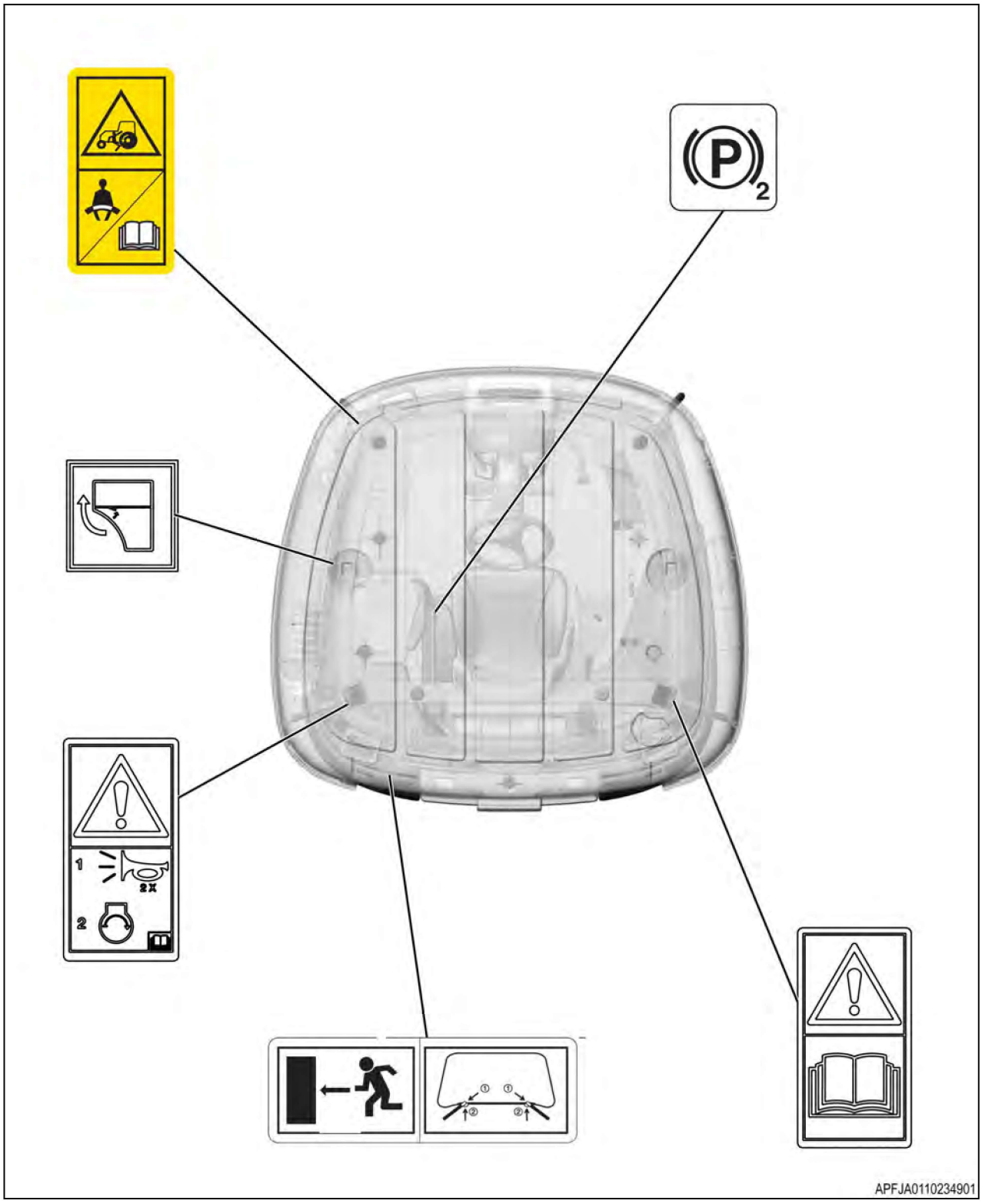

Fig. 19 The top view of the cab

1.5.1 Bystander notification

Bystander notification	
 TRFJA0110246301	Walk around and make sure that no one is around or below the machine. As a warning, honk the horn two times before starting the engine.

1.5.2 Operators manual

Operators manual	
 TRFJA0110246901	Read and understand the operator and safety instructions in the operators manual and on the machine. Make sure to find and understand the control operations. Incorrect operation can cause personal or bystander injury.

1.5.3 Wiper mirror

Wiper mirror	
 TRFJA0110246401	The wiper mirror decal is located inside the cab to the upper, right side of the operator.

1.5.4 Door handle

Door handle	
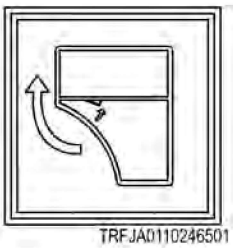 TRFJA0110246501	The door handle sign is located on the inner door handle. Press the handle and move the door out to open.

1.5.5 Fall off hazard

Fall off hazard		
 TRFJA0110246601	 TRFJA0110246701	Operators and passengers must have the seat belt correctly fastened during any machine operation.

1.5.6 Park brake

Park brake	
 TRDJA0110092402	Use the secondary park brake for an emergency stop, if there is a failure of the service brakes while operating the machine.

1.5.7 Installation date

Installation date	
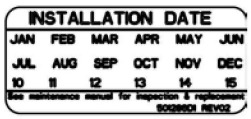 TRFJA0110246801	The installation date sign is located to the left of the operator on the seat belt.

1.5.8 Alternate exit

Alternate exit	
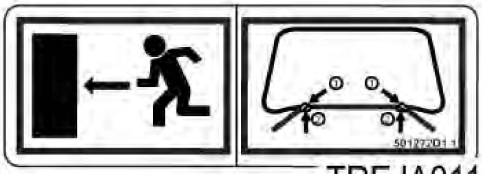 TREJA0110486701	In an emergency, use the rear window as an exit. Open the window. Disconnect the connector at the end of the rod that is in the struts. Remove the struts from the window.

1.6 Hydraulic safety signs

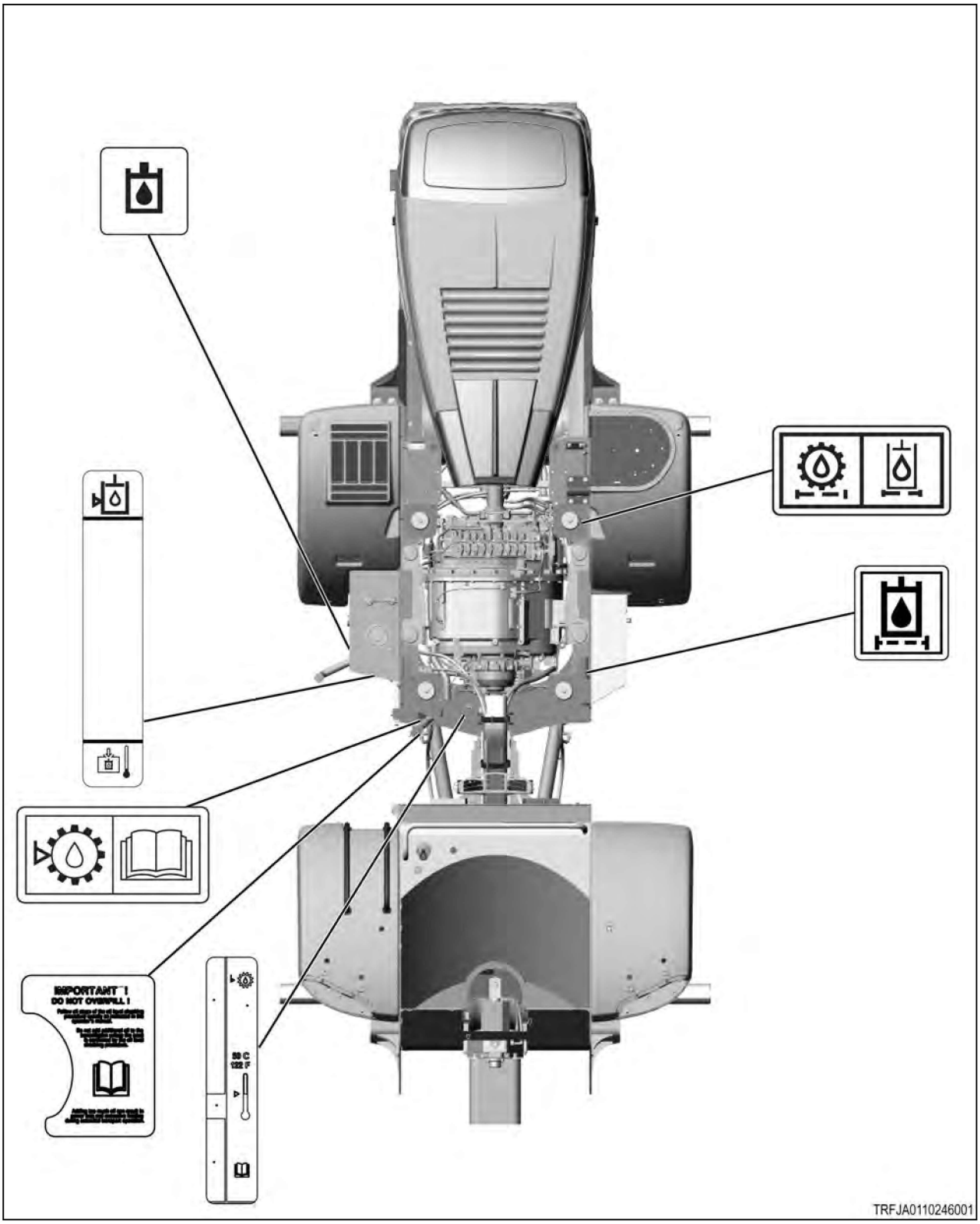

Fig. 20 The top view of the machine

1.6.1 Transmission gauge

Transmission gauge	
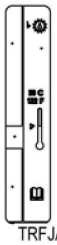 TRFJA0110245701	The transmission gauge sign is located on the left rear of the machine on the sight gauge.

1.6.2 Transmission oil fill level

Transmission oil fill level	
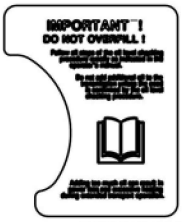 TRFJA0110245601	Add oil only if the transmission oil level procedure shows it is necessary. Too much oil will make the transmission weak and become too hot during extended transport operation. See the operators manual information for checking the transmission oil level.

1.6.3 Hydraulic fill

Hydraulic fill	
 TRFJA0110246101	The hydraulic fill sign is located on the right side of the chassis, adjacent to the gauge on the hydraulic tank.

1.6.4 Hydraulic couplers

Hydraulic couplers	
 TRFJA0110249301	The hydraulic coupler sign is to the left of the implement valves on the fuel tank. The left side coupler is the extend port. The right side coupler is the retract port.

1.6.5 Transmission oil fill

Transmission oil fill	
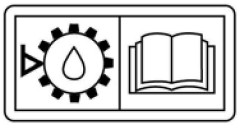 TRFJA0110245501	The transmission oil fill sign is located on the transmission fluid sight gauge.

1.6.6 Transmission / hydraulic oil filter

Transmission / hydraulic oil filter	
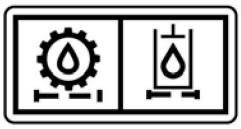 TRFJA0110245901	The transmission and hydraulic oil filter sign indicates the location of the filters. Replace the filters as necessary.

1.6.7 Hydraulic oil filter

Hydraulic oil filter	
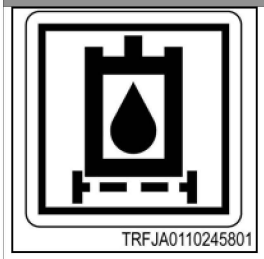 TRFJA0110245801 *Fig. 21*	The hydraulic oil filter sign indicates the location of the hydraulic oil filter. Change the filter as necessary.

1.6.8 Oil level

Oil level	
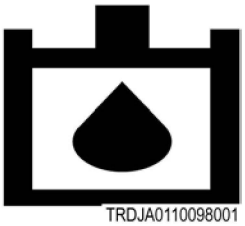 TRDJA0110098001	The oil level sign is adjacent to the sight gauge. See the operator manual for the procedure to do a check of the oil level.

1.7 Electrical safety signs

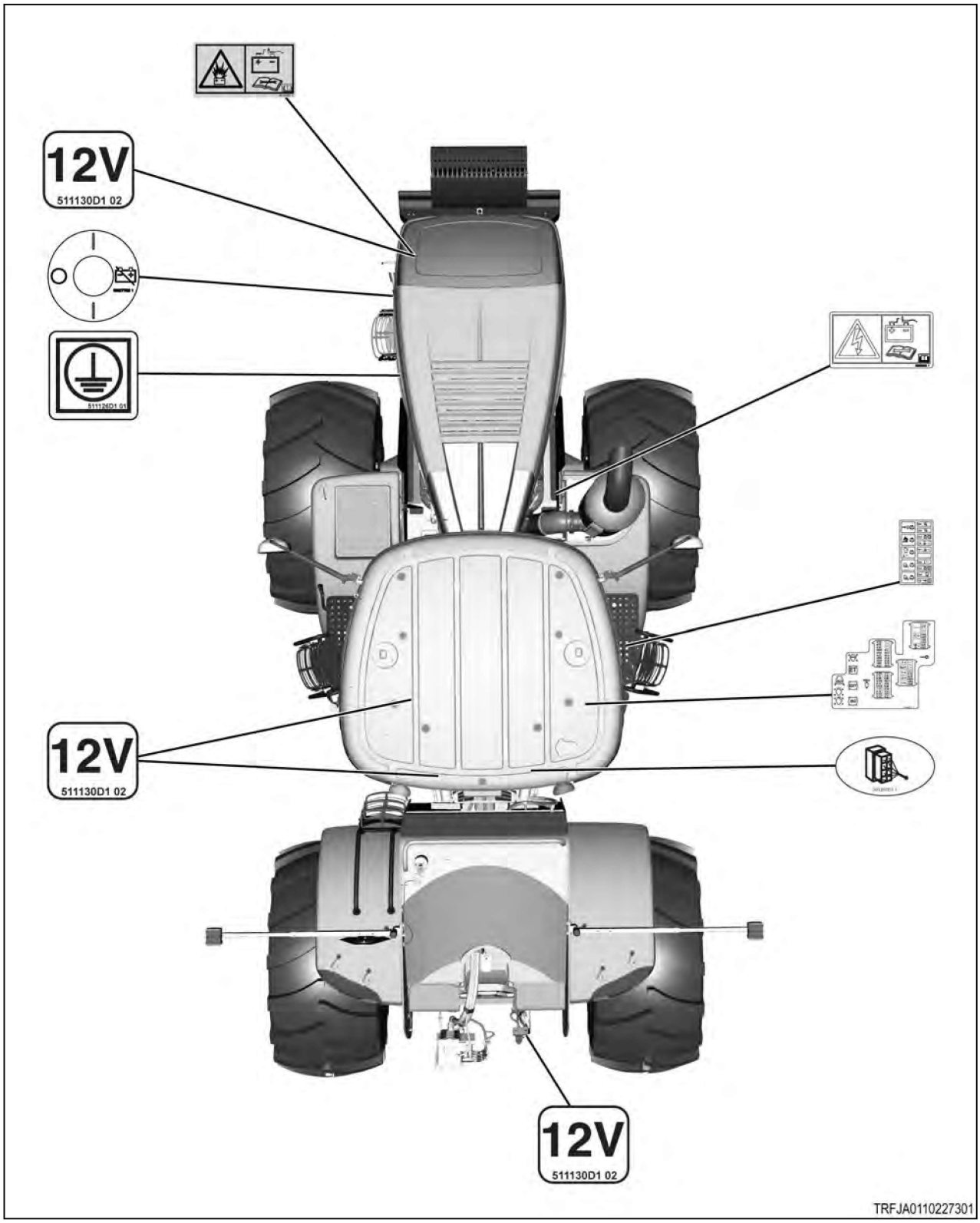

Fig. 22

1.7.1 Rear terminal mini fuse relay

Rear terminal mini fuse relay	
 TRFJA0110279301	The rear terminal mini fuse relay is in the service cabinet on the right side of the machine. Panel includes the Engine switched PWR, DEF heater, EGR, and engine cover LH flood lights.

1.7.2 Fuse / relays

Fuse / relays	
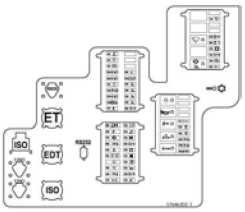 TRFJA0110226601	Located under the side cover on the right side of the cab.

1.7.3 Electrical hazard

Electrical hazard	
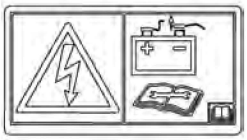	When disconnecting the battery, do not ground out the positive side of the battery. Possible electrocution or shock can occur. Read the service manual. Read the operator manual. A lead-acid battery makes flammable and explosive gases. Keep the sparks and flames away from the battery. Injury or death can occur.

1.7.4 Battery explosion

Battery explosion	
 TRFJA0110226901	Incorrect jumper cable connections can cause an explosion resulting in personal injury. Connect the positive cable from the external power source to the positive jump start post. Connect the negative cable from the external source to the engine block or frame. Remove the negative cables from the batteries before removing the starter solenoid cover and before servicing the electrical system.

1.7.5 12 volt

12 volt	
	The machine is equipped with a 12 volt electrical system. **WARNING:** **Do not jump start a 12 volt system with a 24 volt power supply. Explosion hazard can occur causing serious injury or death.**

1.7.6 Electrical ground

Electrical ground	
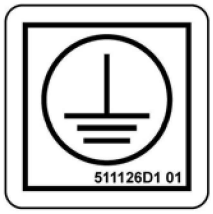 TRFJA0110226801	The electrical ground decal shows the location of the electrical ground connection.

1.7.7 Wire access

Wire access	
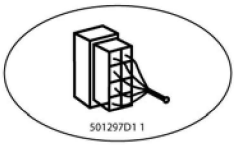 TRFJA0110227101	The wire access decal shows the location of the four pin connection.

1.7.8 Battery shut off

Battery shut off	
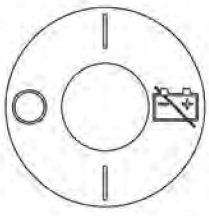	The battery shut off decal is located on the left hand side of machine. The circle and the battery is the off position. The lines (I) are the on position.

2. Introduction

2.1 Machine identification MT900E 49
2.2 Serial number definition 51
2.3 Intended use 53
2.4 Proper disposal of waste 54
2.5 Pre-Delivery 55
2.5.1 Pre-delivery checklist 55
2.6 Emissions warranty - Tier IV final 56
2.6.1 United States and Canada emission control warranty statement 56
2.6.2 California emission control warranty statement 59

2.1 Machine identification MT900E

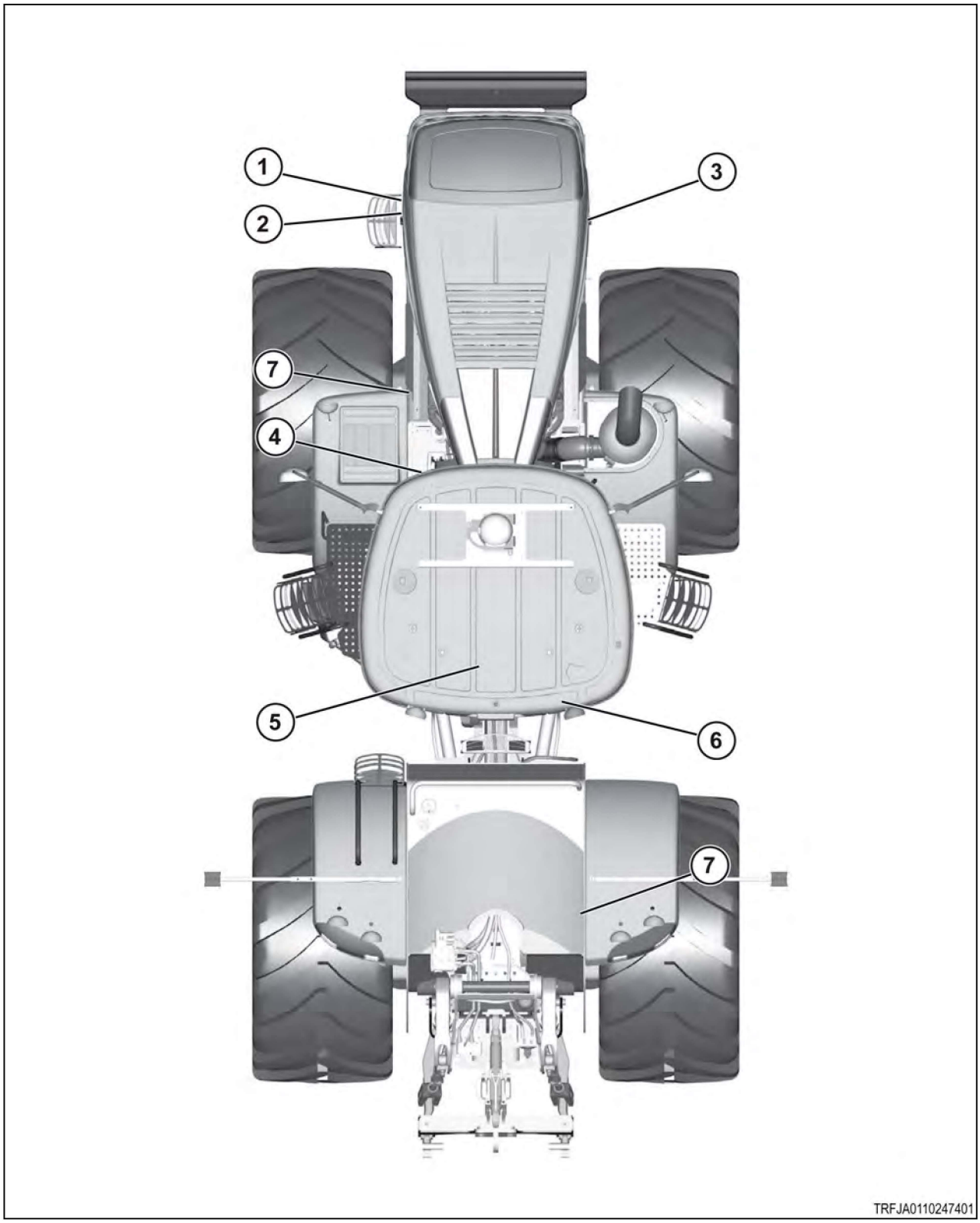

Fig. 1

Callout	Description	Serial Number
1	Emissions control information	
2	Machine PIN plate	
3	Engine serial number	
4	Cab serial number	
	FOPS (Falling objects protective structure) the plate is located in the front of the cab on the outside	
	ROPS (Rollover protective structure) the plate is located in the front of the cab on the outside	
5	Operator seat serial number	
6	Transmission serial number. The plate is on the back of the transmission.	
7	Front axle serial number	
	Rear axle serial number	

2.2 Serial number definition

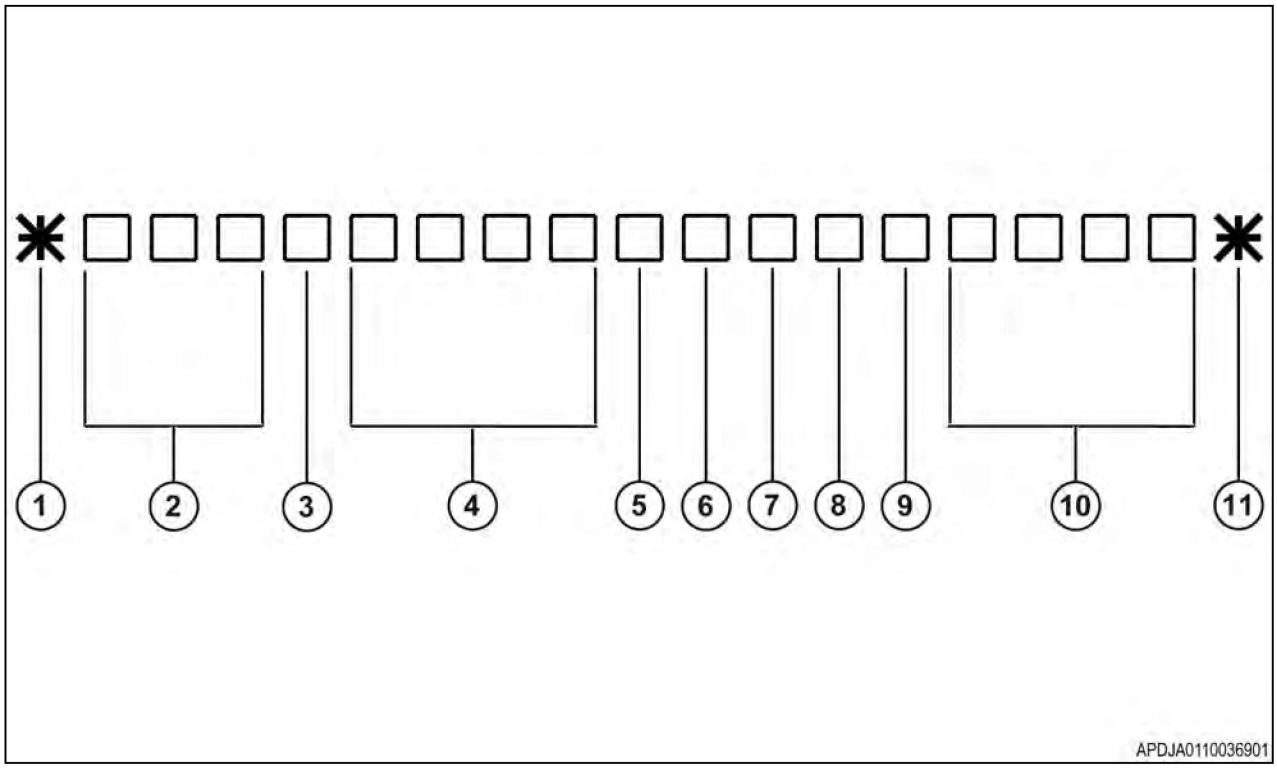

Fig. 2

Definition of the serial number.

1 Beginning Symbol
2 World Manufacturer Code
3 Brand Code
4 Model Identifier (Model Number)
5 Check Letter
6 Model Year Code
7 Location Built Code
8 Option Code
9 Option Code
10 Machine Sequence Number - sequence number will start over at the beginning of each model year. The first machine of each model year will start with sequence 1001.
11 Ending Symbol

NOTE: *For serial number breaks in this manual, only the information from the model year code and following will be given.*

Code	Definition
A	Ag-Chem
C	Challenger
S	Spra-Coupe
W	Willmar
M	Massey Ferguson

Brand code definitions

Code	Definition	Code	Definition
W	2011	H	2017
C	2012	J	2018
D	2013	K	2019

Code	Definition	Code	Definition
E	2014	L	2020
F	2015	M	2021
G	2016	N	2022

Model year code definition

Code	Definition
0	No code
A	745
B	755
C	765
D	775
G	835
H	845
J	855
K	865
L	875
R	945
S	955
T	965
U	975
W	0738
X	0740
Y	0743

Position 8 option code definition

Code	Definition
0	No code
A	EAME ag (MT700)
B	EAME scraper (MT700)
C	ROW ag (MT700)
D	ROW ag wide (MT700)
E	ROW ag ultra-wide (MT700)
F	ROW scraper (MT800 and MT900)
G	ROW ag (MT800 and MT900)

Position 9 option code definition

2.3 Intended use

This machine is designed solely for use in customary agricultural operations.

Do not use this machine for any application or purpose other than those described in this manual. The manufacturer accepts no liability for damage or injury resulting from misuse of this machine.

Compliance with the conditions of operation, service and repair as specified by the manufacturer constitute essential elements for the intended use of this machine.

This machine should be operated, serviced and repaired only by qualified persons familiar with its characteristics and familiar with the relevant safety rules and procedures.

All generally recognized safety regulations and road traffic regulations must be obeyed at all times.

Any unauthorized modifications performed on this machine will relieve the manufacturer of all liability for any resulting damage or injury.

2.4 Proper disposal of waste

Improper disposal of waste can pollute the environment and ecology. A few examples of potentially harmful equipment waste can include, but not limited to, items such as oil, fuel, coolant, brake fluid, filters, battery chemicals, tires, etc.

Use leak proof containers when draining fluids. Do not use food or beverage containers to collect waste fluids, as food or beverage container(s) may mislead someone into drinking from them.

Do not pour or spill waste onto the ground, down a drain, or into any water source.

Air conditioning refrigerants escaping into the air can damage the Earth's atmosphere. Government regulations may require a certified air conditioning service center to recover and recycle used air conditioning refrigerants.

Inquire with local environmental or recycling center on the proper way to recycle or dispose waste.

2.5 Pre-Delivery

2.5.1 Pre-delivery checklist

Attention dealer, refer to AGCO Tech Connect for machine pre-delivery inspection information.

2.6 Emissions warranty - Tier IV final

2.6.1 United States and Canada emission control warranty statement

APPLICABILITY

This section shall apply to new 1996-1999 model year and heavy duty off road compression-ignition engines and new 2000 and later model year compression-ignition engines. The warranty period shall begin on the date the engine or equipment is delivered to an ultimate purchaser. The use of alternative fuels shall not void the warranties on any engine certified to use such fuel.

WARRANTY STATEMENT

AGCO warrants to the ultimate purchaser and each subsequent owner that the compression-ignition engine and emission related parts in this equipment are designed, built, and equipped so as to conform with all applicable regulations adopted by the Air Resources Board (ARB) pursuant to its authority in Chapters 1 and 2, Part 5, Division 26 of the Health and Safety Code provided there has been no abuse, neglect, or improper maintenance of the engine. AGCO also warrants to the ultimate purchaser and each subsequent owner that the compression-ignition engine and emission related parts in the equipment are designed, built, and equipped so as to conform with all applicable regulations adopted by the US Environmental Protection Agency, pursuant to its authority under the Federal Clean Air Act provided there has been no abuse, neglect, or improper maintenance of the engine. This warranty is effective in all states of the U.S.A. and all provinces and territories of Canada.

WARRANTY PERIOD

The warranty period for this engine's emission related parts to be free from defects in materials and workmanship which cause the failure of a warranted part to be identical in all material respects to the parts as described in the engine manufacturer's application for certification begins on the date the engine or equipment is delivered to an ultimate purchaser and continues for a period of five (5) years or 3,000 hours for 19 to 560 kW emission related parts except as noted below. In the absence of a device to measure hours of use, the engine emissions related parts shall be warranted for a period of five (5) years.

For all engines rated less than19kW, and for constant-speed engines rated under 37kW with rated speeds higher than or equal to 3000rpm, the period of two (2) years or 1,500 hours of operation, whichever occurs first. In the absence of a device to measure hours of use, the engine shall be warranted for a period of two years. If any emission related part on your engine fails within the warranty period, the part will be repaired or replaced by AGCO.

AGCO'S WARRANTY RESPONSIBILITY

Listed below are the parts covered by this warranty. Any part listed below that is subject to scheduled maintenance during the warranty period is warranted up to the first scheduled replacement point for that part. A part repaired or replaced under this warranty is warranted for the remainder of the warranty period. Parts replaced under this warranty become the property of the manufacturer. The warranted parts could include:

POWER RANGE	WARRANTY TERM	COVERED COMPONENTS
Below or equal to 19kw	2 years or 1,500 hours	Rubber Flanges, Fuel Injection Pump, Fuel Injectors, Intake Manifold, Exhaust Manifold, Nozzle Assembly, Turbo Charger (if applicable), Controlled Hot air Intake System. Miscellaneous Vacuum, temperature, and time sensitive valves and switches, Electronic control units, sensors, solenoids and wiring harnesses. Hoses, belts, connectors, assemblies, clamps, fitting, tubing, sealing , pulleys, belts and idlers, Emission Control Information Labels, Any other part with the primary purpose of reducing emissions or that can increase emissions during failure without significantly degrading engine performance.
19-37kw	5 years or 3,000 hours	Rubber Flanges, Fuel Injection Pump, Fuel Injectors, Intake Manifold, Exhaust Manifold, Nozzle Assembly, Turbo Charger (if applicable), Controlled Hot Air Intake system, Miscellaneous Vacuum, temperature, and time sensitive valves and switches, Electronic control units, sensors, solenoids, and wiring harnesses. Hoses, belts, connectors, assemblies, clamps, fitting, tubing, sealing , pulleys, belts and idlers, Emission Control Information Labels, Any other part with the primary purpose of reducing emissions or that can increase emissions during failure without significantly degrading engine performance.
37kw-Up	5 years or 3,000 hours	Fuel Injection Pump, Nozzle Assembly, Injection Pipe, Connector of Fuel Line, Intake manifold, Fuel pipe Assembly, Inlet Pipe, Inlet Pipe band, air cleaner element, fuel filter element, turbocharger systems, exhaust manifold, hoses, clamps, connectors, and sealing gaskets of devices used in systems above, catalysts, Electronic control units and sensors**, cold start enrichment system, charge air cooling system, controlled hot air intake system, catalytic converter, exhaust manifold, regenerators, oxidizers, fuel additive devices, and any other device used to regenerate or aid in the regeneration of the particulate control device, smoke puff limiters, selective catalyst reduction, reductant (DEF) containers/dispensing systems, Miscellaneous Vacuum, temperature, and time sensitive valves and switches, solenoids, and wiring harnesses. Hoses, belts, connectors, assemblies, clamps, fitting, tubing, sealing, gaskets or devices and mounting hardware, pulleys, belts and idlers, Emission Control Information Labels, Any other part with the primary purpose of reducing emissions or that can increase emissions during failure without significantly degrading engine performance.

NOTE: Filters that are replaced as part of normal scheduled maintenance are NOT covered by emissions warranty. These parts are listed as, but not limited to, engine air filter, oil filter, fuel filter, DEF filters, etc.

** SENSORS RELATING TO EMISSION COMPONENTS ONLY

Repair or replacement of any warranted part under the warranty provisions of this statement shall be performed at no charge to the owner at an authorized warranty station.

The owner shall not be charged for diagnostic labor that leads to the determination that a warranted part is in fact defective, provided that such diagnostic work is performed at an authorized warranty station.

OWNER MAINTENANCE AND REPAIR RESPONSIBILITY

The engine owner is responsible for the proper use and maintenance of the engine, as specified in the Operator's Manual. AGCO reserves the right to deny coverage under this warranty if the owner has not properly maintained the engine and/or emission related parts and failure occurs due to neglect, abuse, and/or unapproved modifications.

AGCO is not responsible for resultant damage to an emission-related part or component resulting from:

- Any application or installation AGCO deems improper
- Attachments, accessory items or parts not sold nor approved by AGCO.
- Improper engine maintenance, repair or abuse
- Owner's unreasonable delay in making the product available after being notified of a potential product problem.

AGCO shall be liable for damages to other engine components proximately caused by a failure under warranty of any warranted part.

This warranty is in addition to AGCO Standard Warranty.

AGCO recommends that the original owner keep the original purchase receipt (with the date of initial purchase), and all repair receipts and maintenance records, and transfer them to any subsequent owner.

However, AGCO will not deny warranty claims solely for the lack of receipts or failure to document the performance of all scheduled maintenance. The engine owner is responsible for presenting the engine to the nearest Dealer or service station authorized by AGCO when a problem exists.

Subject to the limitations above, non-warranty maintenance or repair of emission control parts on this engine may be performed by the owner, or by any repair establishment or individual, without affecting coverage under this warranty; however, reimbursable warranty repairs must be performed by a dealer or service center authorized by AGCO or the manufacturer of this equipment.

The use of parts that are not equivalent in performance and durability to genuine parts may impair the effectiveness of the emission control system and prevent coverage under this warranty. If non-genuine AGCO parts are used for maintenance or replacement on this engine, you should assure yourself that such parts are warranted by their manufacturer to be equivalent to genuine parts in performance and durability.

EMISSION WARRANTY EXCLUSIONS

This warranty shall not cover any of the following:

- Conditions resulting from tampering, misuse, abuse, improper adjustment, engine alteration, use of modified parts, use of replacement parts that are not the same in performance and durability as genuine replacement parts, failure to use the recommended fuel or oil, use of unapproved fuel or oil additives, or failure to perform required maintenance.
- Consequential damages such as loss of time, inconvenience, or loss of use of this engine or equipment.
- Damages or repair costs caused by the owner's unreasonable delay in making the engine available for warranty inspection and repair.
- Repairs not covered by this warranty, and diagnosis or inspection fees that do not result in eligible warranty service being performed.
- Any replacement with non-genuine parts or malfunction of genuine parts due to use of non-approved parts

The use of any non-exempted add-on or modified parts shall be grounds for disallowing a warranty claim.

- Travel Time and Mileage *

- Freight *

* Unless mandated by State or Provincial laws.

OBTAINING WARRANTY SERVICE

All repairs qualifying under this limited warranty must be performed by a Dealer or service center authorized by AGCO or the manufacturer of this equipment.

To obtain warranty service, owner should take the engine to the nearest Dealer or service center authorized by AGCO or the equipment manufacturer. If available, the original purchase receipt (showing the initial date of purchase) and all available maintenance records should be presented.

The authorized AGCO dealer will contact AGCO Warranty Department for confirmation of coverage.

The authorized Dealer or service center may perform the necessary repairs or adjustments within a reasonable time and furnish owner with a copy of the repair order. AGCO wants to assist in providing the services applicable under this warranty. If you need assistance in locating the nearest authorized Dealer or service center, or have any questions about your warranty rights and responsibilities, you should contact AGCO Answers at **1-877-525-4384** or email agcoanswers@agcocorp.com

2.6.2 California emission control warranty statement

YOUR WARRANTY RIGHTS AND OBLIGATIONS

The **California Air Resources Board (CARB)** and AGCO Corporation ("AGCO") are pleased to explain the **emission control system** warranty on Model Year 2016 and later off-road diesel engines. In California, new heavy-duty off-road engines must be designed, built, and equipped to meet the State's stringent anti-smog standards. AGCO must warrant the emission control system on your engine for the periods of time listed below provided there has been no abuse, neglect or improper maintenance of your engine.

Your emission control system may include parts such as the fuel-injection system and the air induction system. Also included may be hoses, belts, connectors and other emission-related assemblies.

Where a warrantable condition exists, AGCO will repair your heavy-duty off-road engine at no cost to you including diagnosis, parts, and labor.

MANUFACTURER'S WARRANTY COVERAGE:

The emission related devices on your Model Year 2016 and later heavy-duty off-road engines are warranted for five (5) years or 3000 hours of operation for all engines 19KW or greater, whichever occurs first from the date of delivery of the engine to the initial purchaser.

If any emission-related part on your engine is defective, the part will be repaired or replaced by AGCO within the warranty period.

A) General Emissions Warranty Coverage

AGCO warrants to the ultimate purchaser and each subsequent purchaser of each off-road compression-ignition engine that the engine is:

(1) Designed, built, and equipped so as to conform with all applicable regulations adopted by the Air Resources Board pursuant to its authority in Chapters 1 and 2, Part 5, Division 26 of the Health and Safety Code; and

(2) Free from defects in materials and workmanship which cause the failure of a warranted part to be identical in all material respects to the part as described in the engine manufacturer's application for certification for a period of five years or 3,000 hours of operation, whichever occurs first, for all engines rated at 19KW and greater, except as noted below. In the absence of a device to measure hours of use, the engine shall be warranted for a period of five years.

B) Warranty on emissions-related parts shall be interpreted as follows:

(1) Any warranted part which is not scheduled for replacement as required maintenance shall be warranted for the warranty period defined in Subsection (A)(2). If any such part fails during the period of warranty coverage, it shall be repaired or replaced by the engine manufacturer according to Subsection (4) below. Any such part repaired or replaced under the warranty shall be warranted for the remaining warranty period.

(2) Any warranted part which is scheduled only for regular inspection shall be warranted for the warranty period defined in Subsection (A)(2). A statement in such written instructions to the effect of "repair or replace as necessary" shall not reduce the period of warranty coverage. Any such part repaired or replaced under warranty shall be warranted for the remaining warranty period.

(3) Any warranted part which is scheduled for replacement as required maintenance shall be warranted for the period of time prior to the first scheduled replacement point for that part. If the part fails prior to the first scheduled replacement, the part shall be repaired or replaced by the engine manufacturer according to Subsection (4) below. Any such part repaired or replaced under warranty shall be warranted for the remainder of the period prior to the first scheduled replacement point for the part.

(4) Repair or replacement of any warranted part under the warranty provisions of this article shall be performed at no charge to the owner at a warranty station.

(5) Notwithstanding the provisions of Subsection (4) above, warranty services or repairs shall be provided at all manufacturer distribution centers that are AGCO dealers authorized to service the subject engines.

(6) The owner shall not be charged for diagnostic labor that leads to the determination that a warranted part is in fact defective, provided that such diagnostic work is performed at a warranty station.

(7) The engine manufacturer shall be liable for damages to other engine components proximately caused by a failure under warranty of any warranted part.

(8) Throughout the engine's warranty period defined in Subsection (A)(2), the engine manufacturer shall maintain a supply of warranted parts sufficient to meet the expected demand for such parts.

(9) Any replacement part, as defined in Section 1900(b)(23), Title 13, may be used in the performance of any maintenance or repairs and must be provided without charge to the owner. It is not necessary for replacement parts to be the same brand or by the same manufacturer as the original part sold with the engine. Such use shall not reduce the warranty obligations of the engine manufacturer.

(10) Add-on or modified parts, as defined in Section 1900(b)(1) and (b)(17), Title 13, that are not exempted by the Air Resources Board may not be used. The use of any non-exempted add-on or modified parts shall be grounds for disallowing a warranty claim made in accordance with this article. The engine manufacturer shall not be liable under this article to warrant failures of warranted parts caused by the use of a non-exempted add-on or modified part.

(11) The Executive Officer may request and, in such case, the engine manufacturer shall provide, any documents which describe that manufacturer's warranty procedures or policies.

C) Each manufacturer shall include a copy of the following emission warranty parts list with each new engine, using those portions of the list applicable to the engine.

(1) Fuel Metering System
- (A) Fuel injection system
- (B) Air/fuel ratio feedback and control system.
- (C) Cold start enrichment system.

(2) Air Induction System
- (A) Controlled hot air intake system.
- (B) Intake manifold.
- (C) Turbocharger/Supercharger Systems.
- (D) Charge Air Cooling Systems.

(3) Catalyst or Thermal Reactor System

(A) Catalytic converter.
(B) Diesel Oxydation Catalyst (DOC)
(C) Exhaust manifold

(4) Particulate Controls
(A) Smoke Puff Limiters.

(5) Advanced Oxides of Nitrogen (NOx) Controls
(A) NOx Absorbers
(B) Selective Catalyst Reduction (SCR)
(C) Reluctant (urea/fuel) containers/dispensing systems
(D) Exhaust Gas Recirculation System (EGR)

(6) Positive Crankcase Ventilation (PCV) System.
(A) PCV Valve.
(B) Oil Filler Cap.

(7) Miscellaneous items Used in Above Systems
(A) Vacuum, temperature, and time sensitive valves and switches.
(B) Electronic control units, sensors, solenoids, and wiring harnesses.
(C) Hoses, belts, connectors, assemblies, clamps, fittings, tubing, sealing gaskets or devices, and mounting hardware.
(D) Pulleys, belts and idlers.
(E) Emission Control Information Labels
(F) Any other part with the primary purpose of reducing emissions or that can increase emissions during failure without significantly degrading engine performance.

OWNER'S WARRANTY RESPONSIBILITIES:

As the heavy-duty off-road engine owner, you are responsible for the performance of the **required maintenance listed in your owner's manual** .

AGCO recommends that you retain all receipts covering maintenance on your heavy-duty off-road engine, but AGCO cannot deny warranty solely for the lack of receipts or for your failure to ensure the performance of all scheduled maintenance.

As the heavy-duty off-road engine owner, you should however be aware that AGCO may deny you warranty coverage if your heavy-duty off-road engine or a part has failed due to abuse, neglect, improper maintenance or unapproved modifications.

Your engine is designed to operate on diesel fuel only. Use of any other fuel may result in your engine no longer operating in compliance with California's emissions requirements.

You are responsible for initiating the warranty process. The ARB suggests that you present your heavy-duty off-road engine to an AGCO dealer as soon as a problem exists. The warranty repairs should be completed by the dealer as expeditiously as possible.

EMISSION WARRANTY EXCLUSIONS

This warranty shall not cover any of the following:

- Conditions resulting from tampering, misuse, abuse, improper adjustment, engine alteration, use of non-exempted add-on or modified parts, use of replacement parts that are not the same in performance and durability as genuine replacement parts, failure to use the recommended fuel or oil, use of unapproved fuel or oil additives, or failure to perform required maintenance.
- Consequential damages such as loss of time, inconvenience, or loss of use of this engine or equipment.
- Damages or repair costs caused by the owner's unreasonable delay in making the engine available for warranty inspection and repair.
- Repairs not covered by this warranty, and diagnosis or inspection fees that do not result in eligible warranty service being performed.

- Any replacement with non-exempted add-on or modified parts or malfunction of warranted parts due to use of non-exempted add-on or modified parts.
- The use of any non-exempted add-on or modified parts shall be grounds for disallowing a warranty claim.
- Travel Time and Mileage
- Freight, (shipping and handling)
- Unless mandated by State or Provincial laws.
- Neither AGCO nor any AGCO authorized dealer will be liable for incidental or consequential damages.

OBTAINING WARRANTY SERVICE

To obtain warranty service, owner should take the engine to the nearest Dealer or service center authorized by AGCO or the equipment manufacturer. If available, the original purchase receipt (showing the initial date of purchase) and all available maintenance records should be presented.

The authorized AGCO dealer will contact AGCO Warranty Department for confirmation of coverage.

The authorized Dealer or service center may perform the necessary repairs or adjustments within a reasonable time and furnish owner with a copy of the repair order. AGCO wants to assist in providing the services applicable under this warranty. If you need assistance in locating the nearest authorized Dealer or service center, or have any questions about your warranty rights and responsibilities, you should contact AGCO Answers at **1-877-525-4384** or email agcoanswers@agcocorp.com

3. Operation

3.1 General inspection . . . 67
3.1.1 Walk-around inspection . . . 67
3.2 Starting engine . . . 69
3.2.1 Pre-start checks . . . 69
3.2.2 Engine starting . . . 69
3.2.3 Engine starting in normal conditions . . . 69
3.2.4 Engine starting with jumper cables . . . 70
3.3 Engine start switch . . . 71
3.4 Engine operation with no load or low load . . . 72
3.5 Monitor mounting bar . . . 73
3.6 Lamp switches . . . 74
3.6.1 Multifunction light switch on the steering column . . . 74
3.6.2 Extremity lamps . . . 75
3.6.3 Interior lamps . . . 75
3.6.4 Courtesy lamp . . . 75
3.6.5 Cab switches . . . 76
3.6.6 Exterior courtesy lamps . . . 77
3.6.7 Lighting shutdown delay . . . 77
3.6.8 Rotating beacon . . . 78
3.6.9 Backlighting for switches in the cab . . . 78
3.7 Dash panel . . . 79
3.8 Steering wheel . . . 82
3.8.1 Horn . . . 82
3.8.2 Steering wheel tilt lever . . . 82
3.9 Mirrors . . . 83
3.9.1 Inside rear view mirror . . . 83
3.9.2 Outside rear view mirrors . . . 83
3.10 Radio . . . 84
3.10.1 Blue tooth microphone . . . 84
3.11 Storage and literature compartments . . . 85
3.12 Operator seat . . . 86
3.12.1 Armrest adjustment . . . 86
3.12.2 Standard operator seat . . . 86
3.12.3 Deluxe heated - vented seat . . . 88
3.12.4 Instructor seat . . . 90
3.12.5 Seat belts . . . 90
3.12.6 Operator presence functionality . . . 91
3.13 Storage compartment and tool box . . . 92
3.14 Heating and air conditioning controls . . . 93
3.14.1 Automatic temperature controls . . . 93
3.14.2 Manual temperature control system . . . 94
3.15 Vent locations . . . 95
3.16 Machine management center . . . 96
3.16.1 Terminal . . . 96
3.16.2 Machine management center version information . . . 97
3.16.3 Setting the measurement units . . . 97
3.16.4 Setting the language . . . 99
3.16.5 Setting the decimal display . . . 100

3.16.6 Set the time and date . . . 100
3.16.7 Terminal settings . . . 101
3.16.8 Applications . . . 103
3.16.9 Selecting an auxiliary input . . . 104
3.16.10 Viewing screens . . . 105
3.16.11 Engine . . . 105
3.16.12 Transmission . . . 107
3.16.13 Hydraulic . . . 108
3.16.14 Powertrain protection software (PPS) . . . 109
3.16.15 Measure INST (instantaneous) . . . 109
3.16.16 Measures - field . . . 110
3.16.17 Measures - fuel . . . 111
3.16.18 Memory . . . 111
3.16.19 Power management . . . 114
3.16.20 Tractor settings . . . 115
3.16.21 Slip alarm . . . 116
3.16.22 ISO 11783 Class 3 . . . 117
3.16.23 Service intervals . . . 118
3.16.24 Headland management . . . 122
3.16.25 Headland management icon identification . . . 125
3.16.26 DTC (diagnostic trouble codes) stored or active . . . 127
3.16.27 3-point linkage . . . 128
3.16.28 Slip calibration . . . 130
3.16.29 Inching pedal calibration . . . 132
3.16.30 Radar calibration . . . 133
3.16.31 Enabling the video camera - software version 3.2 and before . . . 135
3.17 Air system operation . . . 136
3.17.1 Air system operation . . . 136
3.17.2 Air hose connection . . . 136
3.18 Machine control . . . 137
3.18.1 Throttle control . . . 137
3.18.2 Decelerator - if equipped . . . 137
3.18.3 Power management . . . 137
3.18.4 Differential lock - if equipped . . . 138
3.18.5 Transmission control . . . 138
3.18.6 Machine ground speeds . . . 139
3.18.7 Transmission control lever . . . 139
3.18.8 Transmission shifting diagram . . . 140
3.18.9 Preselecting a gear before moving . . . 140
3.18.10 Using of the inching clutch control . . . 140
3.18.11 Operating the shuttle shift . . . 141
3.18.12 Speed matching . . . 141
3.18.13 Inching pedal control . . . 142
3.18.14 Brake control . . . 142
3.18.15 Service brakes . . . 143
3.18.16 Hydraulic trailer brake if equipped . . . 143
3.18.17 Park brake . . . 144
3.18.18 Manual parking brake handle . . . 144
3.19 Overweight protection strategy (OWPS) . . . 146
3.20 Hydraulic controls . . . 147
3.20.1 Hydraulic control valve operation . . . 147
3.20.2 Roading lockout switch for the hydraulic control levers . . . 149
3.21 General hydraulic connections . . . 150
3.21.1 General hydraulic connections . . . 150
3.21.2 Connecting the hoses to the quick couplers . . . 150
3.21.3 Disconnecting the hoses from the quick couplers . . . 151
3.21.4 Hydraulic flow management . . . 151

3.21.5 Hydraulic motors . . . 151
3.21.6 Selection of hydraulic motors . . . 151
3.21.7 Single acting cylinders . . . 152
3.21.8 Checking a double acting cylinders . . . 152
3.21.9 Connecting hydraulic motors to the control valves . . . 152
3.21.10 Connecting a grain cart with an auger motor . . . 153
3.21.11 Semi - mounted vacuum planter with the lift assist wheels . . . 154
3.21.12 Connecting the vacuum planter . . . 155
3.21.13 Connecting the air seeder or the grain drill . . . 155
3.21.14 Connecting the spray system pump . . . 157
3.21.15 Connecting the auxiliary implement controls . . . 157
3.21.16 Hydraulic power beyond . . . 158
3.21.17 Connecting a hydraulic motor to power beyond . . . 158
3.21.18 Connecting the auxiliary implement control valve with load sensing . . . 159
3.21.19 Connecting the auxiliary implement control valve without load sensing . . . 159
3.21.20 Auxiliary implement control valve bank . . . 159
3.21.21 Connecting the hydraulic motor with the flow control valve . . . 160
3.22 Electrical system . . . 161
3.22.1 Radar unit . . . 161
3.22.2 Radar connector . . . 161
3.22.3 Battery disconnect switch . . . 162
3.22.4 Single pole connectors . . . 162
3.22.5 Auxiliary power switch . . . 162
3.22.6 Trailer connector . . . 163
3.22.7 Routing the implement cable . . . 163
3.22.8 ISO 11783 connector . . . 163
3.23 Machine performance . . . 165
3.24 Towing and transportation . . . 166
3.24.1 Roading the machine . . . 166
3.24.2 Roading with a 3-point linkage mounted implement . . . 167
3.24.3 Basic towing . . . 167
3.24.4 Towing a stuck machine . . . 168
3.24.5 Towing a machine with a dead engine . . . 168
3.24.6 Accumulator without pressure . . . 169
3.24.7 Transporting the machine . . . 170
3.25 3-point linkage . . . 171
3.25.1 Connecting the implement to the 3-point linkage . . . 171
3.25.2 Disconnecting the implement from the 3-point linkage . . . 171
3.25.3 Connecting the implement to the quick hitch . . . 171
3.25.4 Disconnecting the implement from the quick hitch . . . 173
3.25.5 Console controls . . . 173
3.25.6 3-point linkage . . . 173
3.25.7 Adjusting the 3-point linkage control lever . . . 174
3.25.8 Raise/lower switch for the 3-point linkage . . . 175
3.25.9 External 3-point linkage switch . . . 175
3.25.10 Implement leveling . . . 175
3.25.11 Adjusting the top link . . . 176
3.25.12 Adjusting the draft arm . . . 176
3.25.13 Lift linkages and quick hitch . . . 176
3.25.14 Setting the 3-point linkage side sway . . . 177
3.26 Drawbar . . . 179
3.26.1 Drawbar . . . 179
3.26.2 Connecting drawbar implements . . . 179
3.26.3 Safety chain . . . 180
3.26.4 Adjusting the drawbar position . . . 181
3.26.5 Replacing the wear plates and the rubber stops on the standard drawbar . . . 181
3.27 Implement drive system . . . 182

3.27.1 Operating the power take-off . . . 182
3.27.2 Power take-off shaft . . . 183
3.27.3 Connecting the power take-off implements . . . 183
3.28 Ballasting . . . 184
3.28.1 Ballasting guide lines . . . 184
3.28.2 General guide lines . . . 184
3.28.3 Tire pressure . . . 184
3.28.4 Power hop control . . . 184
3.28.5 Ballasting recommendations for the special application machine . . . 185
3.28.6 Weight splits . . . 185
3.28.7 Ballasting packages . . . 185
3.28.8 Heavy vertical hitch loads . . . 187
3.28.9 Ballasting work sheet . . . 189
3.28.10 Tire inflation guide . . . 192
3.28.11 Calculating wheel slippage for machines without a speed sensor . . . 196
3.28.12 Removing the front weights . . . 197
3.28.13 Installing the front weights . . . 199
3.28.14 Removing the wheel weights . . . 202
3.28.14.1 227 kg (500 lb) . . . 202
3.28.14.2 364 kg (800 lb) . . . 204
3.28.15 Installing the wheel weights . . . 204
3.28.15.1 227 kg (500 lb) . . . 204
3.28.15.2 364 kg (800 lb) . . . 205
3.29 Special applications . . . 208
3.29.1 Special applications drawbars and hitches . . . 208
3.29.2 Ballasting for towed scrapers . . . 208
3.29.3 Hydraulic connections for the towed scraper . . . 208
3.29.4 Towed scraper general guide lines . . . 209
3.29.5 Loading the scraper . . . 209
3.29.6 Loading the tandem scraper . . . 210
3.29.7 Hauling the scraper . . . 210
3.29.8 Dumping the scraper . . . 210
3.29.9 Towing a stuck scraper . . . 210
3.30 Aftermarket equipment applications . . . 211
3.30.1 Chemical tank attachment . . . 211

3.1 General inspection

3.1.1 Walk-around inspection

For maximum service life of the machine, do a walk around inspection before you enter the machine.

Look around the machine and below the machine. Look for loose bolts, oil leaks, coolant leaks, broken parts, or worn parts.

Examine the condition of the implement and the hydraulic components.

Do a check of the oil and the coolant levels.

Make sure the covers and the guards are correctly installed.

Examine the machine for damage and make all necessary repairs before you operate the machine.

Examine these:

- Waste buildup and unwanted material
- Ladder
- Cab platform
- Engine compartment
- Radiator
- 3-point linkage

Examine for oil leaks and correct all oil leaks. Examine these:

- Rear axle
- Engine compartment
- Transmission case and solenoids
- 3-point linkage lift cylinders
- Hydraulic control valve bank
- Hydraulic oil filters
- Hydraulic pumps

Examine the fuel tank and the fuel lines for leaks. Repair all the fuel leaks before you start the engine.

Drain all water from the fuel tank and fuel filter.

Examine the engine cooling system for leaks and for bad hoses. Repair or replace components as necessary.

Examine the belts. Replace as necessary.

Examine these components for damage or too much wear:

- 3-point linkage
- Drawbar
- Drawbar support
- Drawbar wearplate
- Drawbar pin

Repair or replace components as necessary.

Examine the operation of the instrument panel lamps. Examine the operation of all external lamps. Repair or replace all nonfunctional lamps.

Examine all hose clamps. Tighten as necessary.

Examine the horn for correct operation.

Keep the fuel level at the bottom of the filler neck to prevent moisture condensation in the fuel tank.

Examine the condition and how clean each of these components are:

- Ladder
- Platform
- Hand holds
- Windows

Examine the cab rollover protective structure (ROPS) for damage. See the dealer for all necessary repairs.

Make sure the cab is clean. Remove all heavy objects, and objects that are not attached from the cab.

Examine all the hydraulic lines and the hoses for:

- Damage
- Too much wear
- Looseness

Repair or replace hydraulic lines as necessary.

Make sure a slow moving vehicle emblem is on the rear of the machine and implement.

Make sure the cover for the PTO is in position while the PTO is not in operation.

3.2 Starting engine

3.2.1 Pre-start checks

- Check all oil levels, coolant levels, def levels, and fuel levels.
- Adjust the operator seat so the operator can fully push the service brake pedal.
- Inspect the seat belt mounting hardware. Replace any worn or damaged hardware.
- Fasten the seat belt.
- Press the horn twice to alert others before starting the engine.
- Adjust the mirrors.
- Make sure the transmission control lever is in the park position.
- Engage disconnect switch.

3.2.2 Engine starting

NOTE: *Before you start the engine, make sure the area is free of bystanders. When the engine is on and the transmission is in neutral, the machine will articulate if the steering wheel is turned.*

Before you start the engine, sound the horn two times, to alert bystanders and to prevent personal injury caused by unexpected machine movement. To sound the horn, the key must be in the on position.

Prepare to apply the service brakes in case any steering occurs unintentionally when the engine starts.

Make sure the machine is in the park position when you start the machine. Put the transmission in neutral to disengage the park brake Doing this will permit the transmission to go into the forward and reverse positions.

IMPORTANT: *Never push or tow the machine to start the engine. This can damage the powertrain.*

3.2.3 Engine starting in normal conditions

- Move the throttle control lever to the low idle position.
- Move the hydraulic control levers to the hold position.
- Push the inching clutch control all the way down.
- Briefly honk the horn to alert any people in the area.

NOTE: *Do not engage the starter for more than 30 seconds. If the engine does not start, let the starter to cool for two minutes before starting again. The engine start switch must reset to the off position before trying to start again.*

Turn the engine start switch key to the start position (1) to turn the engine. Release the key as soon as the engine starts. The key will return to the run position (2). When the engine starts, keep the throttle control lever in the low idle position until the engine oil pressure bar graph is in the green zone.

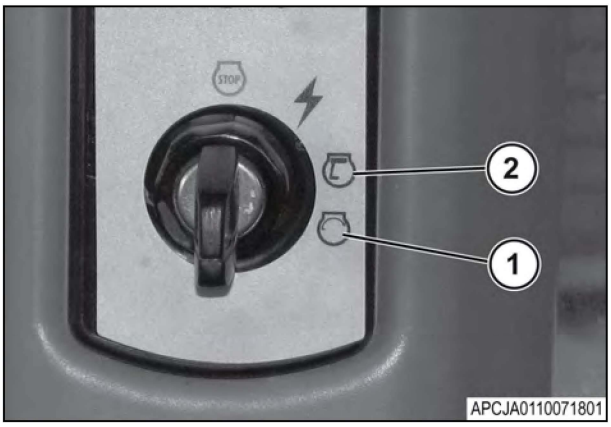

Fig. 1

3.2.4 Engine starting with jumper cables

WARNING:
Always wear eye protection when starting a machine with jumper cables. Incorrect jump start procedures can cause an explosion which can cause personal injury. Always connect the positive battery (+) to the positive battery (+). Connect the negative battery (-) to the negative battery (-). Jump start only when an energy source with the same voltage as is the stalled machine. Turn off all the lights and accessories on the stalled machine or the accessories will operate when the energy source is connected.

Determine the reason why the engine will not start.

Put the transmission control lever into the park position. Lower any implement equipment to the ground and move all the controls to the hold position.

Turn the start switch to the off position. Turn off all the accessories.

Move the power supply operating as an electrical source near the stalled machine so the jump start cables reach. Do not let the power supply come in contact with each other.

Stop the engine of the power supply. If operating an auxiliary power source, turn off the charging system.

Make sure the battery caps on both machines are tight and correctly placed.

Make sure the batteries have the correct level of electrolyte.

Do not let the batteries freeze.

Remove the red protective cap from the positive jump start post (1).

The positive ends of the jump start cable are red. Connect one positive end of the jump start cable to the positive jump start post (1). Do not let the positive cable clamps touch any metal aside from the positive jump start post.

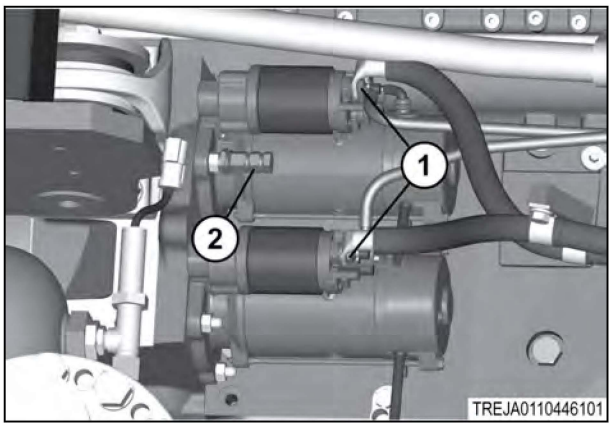

Fig. 2

Connect the other positive end of the jump cable to the positive cable terminal of the electrical source.

Connect one of the negative ends of the jump start cable to the negative cable terminal of the electrical source.

Connect the other negative end of the jumper cable to the negative jump start post (2) of the stalled machine. Do not connect the jump start cable to the battery post. Do not let the jumper cables touch the battery cables, the fuel lines, the hydraulic lines, or any moving parts.

Start the engine of the electrical source or energize the charging system on the auxiliary power source.

Wait a minimum of two minutes to let the batteries charge before trying to start the stalled machine.

Try to start the stalled engine.

3.3 Engine start switch

The engine start switch (1) is on the cab post.

Turn the key to the off (2) position to stop the engine. Turning the key to the off position shuts down the electrical system.

The key must be in the on position (4) for the following functions to operate:

- Radio (optional equipment)
- Fan for the heating and air conditioning
- Seat
- Front window wiper
- Rear window wiper and right window wiper
- Electric mirrors
- Horn
- Cigar lighter
- Lights - headlights, trailer lights
- Terminal strip
- Telemetry

NOTE: *In the accessory position* (3)*, these functions will not operate.*

Turn the key to the run (4) position to engage the machines electrical system. The key returns to this position after releasing from the start position.

Make sure the transmission control lever is in the park position. Turn the key to the start position (5) to start the engine.

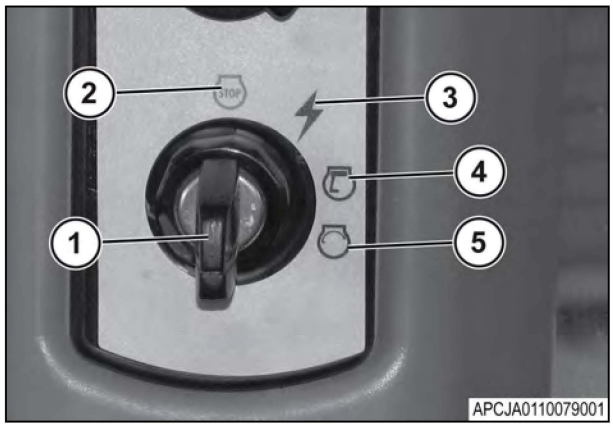

Fig. 3

3.4 Engine operation with no load or low load

Below are the approved specifications for no load or low load engine operation.

Problems can occur if the engine operates continuously at low load (idle).

Maximum approved continuous operating time at low idle: 30 min.

Maximum approved continuous operating time at high idle: 15 min.

After each idle cycle (above), load the engine with a minimum 40% of the maximum rated power, for a minimum of 30 minutes. From the total engine load, use no more than 15% at low load (idle).

Possible out comes if the engine operation is not in the above tolerances:

1. Oil leakage from the exhaust system
   - Continuous operation on no load or low load causes decreased combustion temperature. This causes carbon, which can cause damage to injectors, valves, and piston rings. This can cause leakage through the exhaust manifold, turbocharger connections, other components.
2. Carbon particles on the cylinder heads, exhaust manifold and in the exhaust line
   - Raw fuel, oil mist and soot can cause contamination to the exhaust ports, the cylinder heads, and the exhaust manifold. This can decrease the performance of the engine.
3. Fuel dilution
   - If the combustion process is not complete, the raw fuel can cause contamination to the engine oil. This results in decreased lubrication that can cause increased wear to the engine.
4. Smoking
   - Carbon particles in the engine and exhaust line can cause the engine to smoke too much.

NOTE:
A large quantity of carbon in the exhaust line can cause catalyst failure.

3.5 Monitor mounting bar

WARNING:
Structural damage, an overturn, modification, change, or incorrect repair can decrease the structure's protection function thereby voiding this certification. Do not weld on or drill holes in the structure. Consult your dealer to determine the structure's limitations without voiding the certification.

There are three locations to support the mounting for the auxiliary monitors and the controls.

The position for the front mounting (1) is on the right front cab post. There are holes available for mounting auxiliary monitors. A M10 x 20 THD will be applicable for most mounting applications.

The position for the side mounting (2) is located to the right of the operator's seat. The bracket (2), and slotted holes are provided for mounting auxiliary monitors.

Additional tapped holes (3) are located on the right rear cab post. A M10 x 20 THD will be applicable for most applications.

A powerstrip with six covered outlets is located on the right of the operators seat. The outlets provide 12 volt power up to 30 amp maximum.

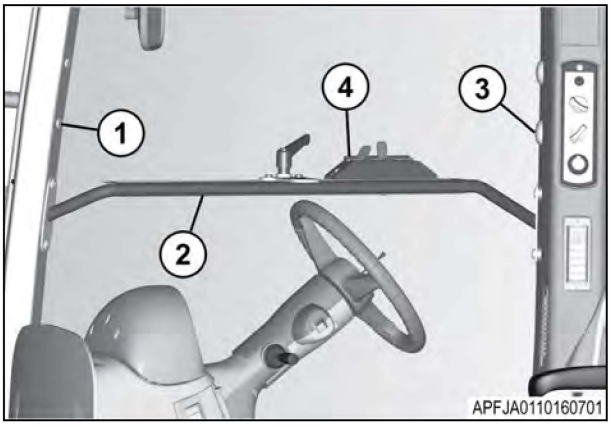

Fig. 4

3.6 Lamp switches

3.6.1 Multifunction light switch on the steering column

WARNING:
Use of work lamps when traversing public roads and accesses may cause an accident and personal injury by impairing the vision of approaching traffic and obscuring the flashing hazard lights. Only the headlight position on the multifunction switch must be used when traversing on roads.

The multifunction light switch twists to the following positions:

(1) Off turns off all exterior lights

(2) Shutdown delay

(3) Turn signals - Push up on the multifunction light switch to engage the right turn signal. Push down on the multifunction light switch to engage the left turn signal . The turn signals work in all multifunction light switch positions.

(4) Headlights - To engage the low beam headlights, pull the multifunction light switch to the operator. In this mode, the flash to pass high beams can turn on. Use the hazard lights along with this position while roading the machine. High beam headlights To engage the high beam headlights, push the multifunction light switch away from the operator. This position also activates the night breaker lighting (optional equipment).

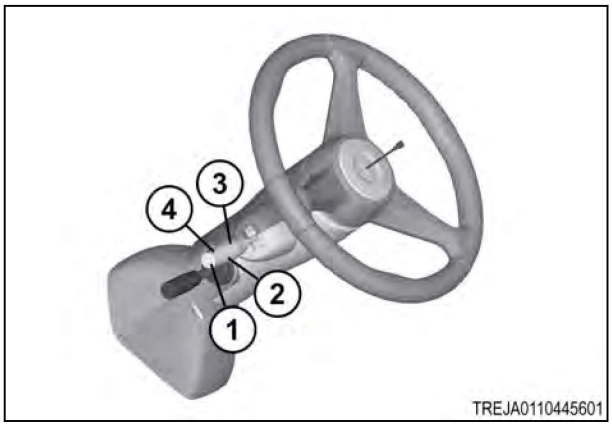

Fig. 5

NOTE:
Always return the switch to the center position when the turn is complete. After turning the machine, the switch will not automatically return to the center position. Make sure the switch is in the neutral position. The turn signals will stay active with the key in the off position.

3.6.2 Extremity lamps

The extremity lamps (1) are on the right and the left sides of the rear frame.

The extremity lamps will illuminate when activating the following:

- Turn signal
- Hazard lamps

The telescopic position of the extremity lamps must change when changing gauge of the machine.

The width of the lamp arms is adjustable. Position the arms so the outer edge of each lamp is within 406 mm (16 in) of the widest measurement of the machine.

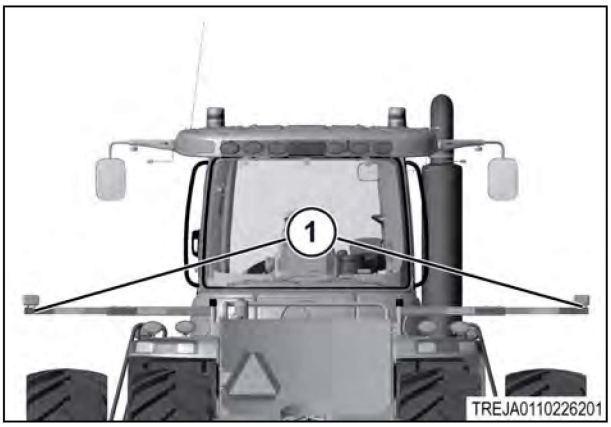

Fig. 6

3.6.3 Interior lamps

The interior lamp (1) is in the upper left-hand side of the interior roof panel. The positions for the lamp switch are:

- On - Press the switch to the rear position
- Off - Press the switch to the middle position
- Open door - Press the switch to the front position. The interior lamp will illuminate when the door for the cab is open.

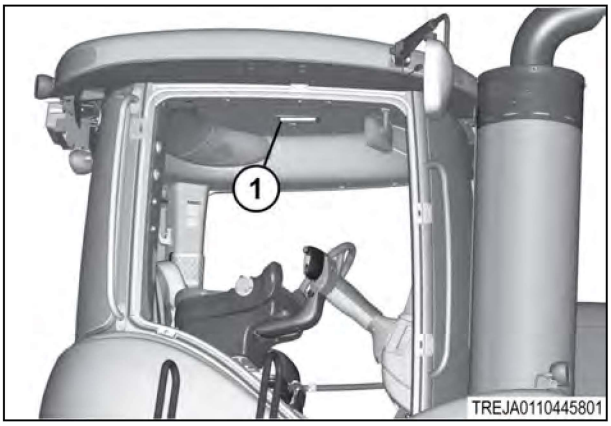

Fig. 7

3.6.4 Courtesy lamp

The courtesy lamp (1) is to illuminate the right-hand console. The lamp activates when the multifunction light switch is turned to any position except the off position.



Fig. 8

3.6.5 Cab switches

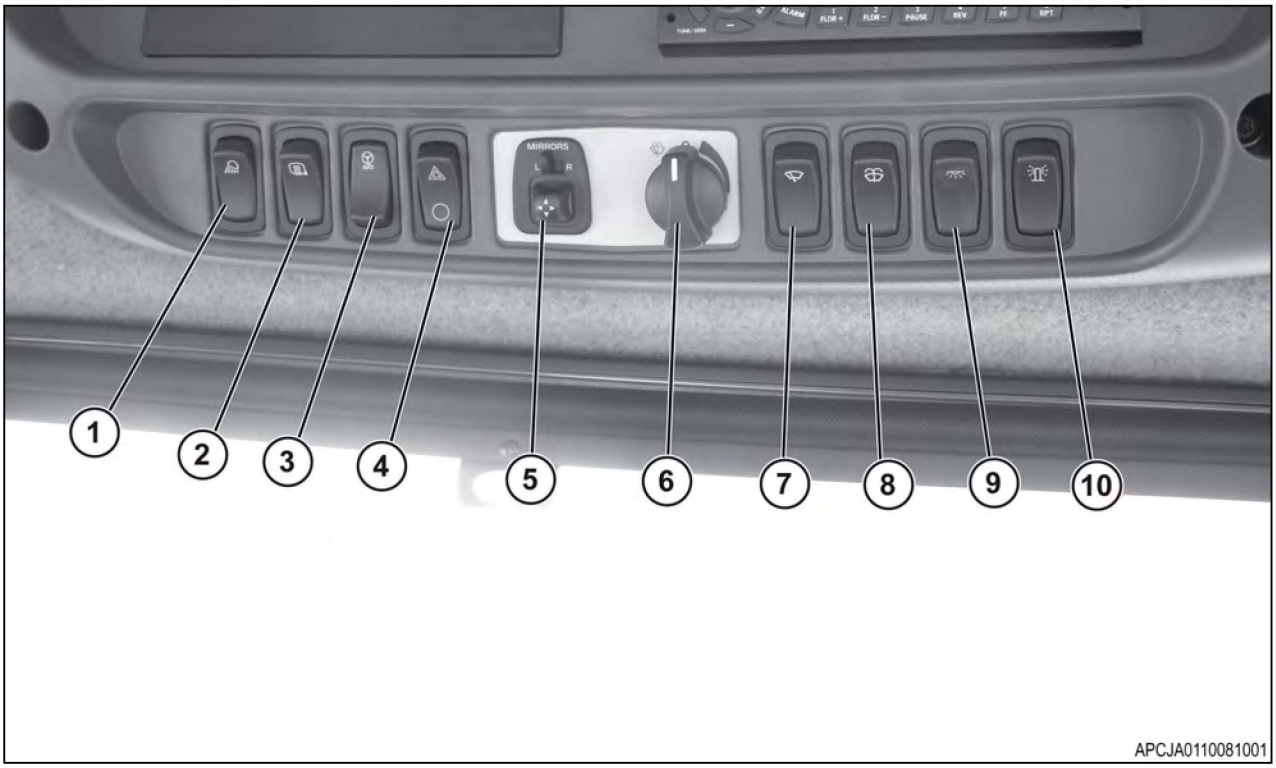

Fig. 9

Callout	Switch/Control	Description
1	Work lamps	The work lamp switch has three positions. For the Off position, push the bottom portion of the switch. For partial work lamps, move the switch to the middle position. For all work lamps, push the top portion of the switch. **NOTE:** *Let the work lamps cool for ten minutes after operation before washing.*
2	Heated mirror	To operate the heated mirror, push the switch up to turn on the switch and down to turn off the switch.
3	Auto-Guide	To engage the control, press upward to turn on the switch and down to turn off the switch.
4	Hazard warning	The hazard warning switch operates the following lamps: • Warning lamps in the roof • Turn signals in the fenders • Extremity lamps • Turn signal indicators in the dash **WARNING:** **Failure to engage the hazard lamps can cause not correct identification of the machine, causing in an accident and personal injury.**
5	Mirror control	Select the right-hand mirror control arrow to operate the right-hand mirror. Select the left-hand mirror control arrow to operate the left-hand mirror. Move the mirrors to the desired location with the directional switch.

Callout	Switch/Control	Description
6	Front window wiper control	To operate the front wiper, rotate control in a clockwise direction. When the lever is half turned, the window wiper will operate in the intermittent mode. When the lever is fully turned, the window will operate at full speed. Push on the center of the control to operate the washer fluid.
7	Rear window wiper	To operate the rear window wiper, press on the top of the switch. Press on the bottom of the switch to turn the wipers off.
8	Rear window washer	To operate the rear window washer fluid, press and hold the top of the switch. The washer will shut off when the switch is released.
9	Exterior courtesy lamp	To activate the exterior courtesy lamps, press on the top of the switch. Press the bottom of the switch to turn the exterior courtesy lamps off.
10	Warning beacon	To operate the warning beacon that mounts on the cab roof, press on the top of the switch. The warning beacon switch receives power only when the engine start key is in the run position.

3.6.6 Exterior courtesy lamps

The exterior courtesy lamp switch has three positions. Press the bottom portion of the switch for the off position. The middle position activates the courtesy lamps only when the door is in an open position. Pressing the top portion of the switch will continuously engage the courtesy lamps.

The exterior courtesy lamps are in the overhang of the cab roof. Three exterior courtesy lamps are part of the standard lighting package.

The exterior courtesy lamp locations in the following areas on the cab:

- On the front left overhang (1) of the cab roof (Illumination for entrance to the cab).
- On the rear right over hang (2) of the cab roof (illumination to connect an implement).
- On the rear left overhang (3) of the cab roof (illumination to connect an implement, and for filling the fuel tank).

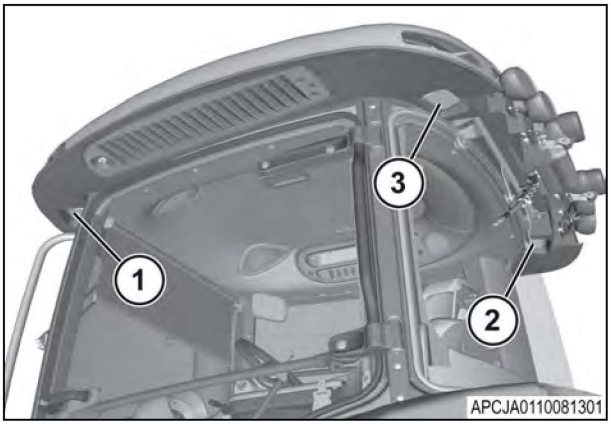

Fig. 10

3.6.7 Lighting shutdown delay

NOTE: *Program through the machine management center (MMC), if the machine is equipped with this option.*

The partial work lamps can be set to a delay to turn off after the machine is shut off. Delay the shutdown of lamps to supply light while leaving the machine.

The following lamps are controlled by the lighting shutdown delay :

- Exterior courtesy lamps
- Side work lamps in the engine cover
- Rear work lamps in the fenders
- Front work lamps near the belt

Use the following procedure for actuating the shutdown delay:

- Enter the desired amount of time for the shutdown delay into the appropriate setup screen (MMC).
- Twist the multifunction lamp switch to the headlamp position (1).
- Turn the engine start switch key to the off position.
- Twist the multifunction lamp switch to the off position.
- The correct lamps will illuminate.

The shutdown can be timed from zero minutes to 15 minutes.

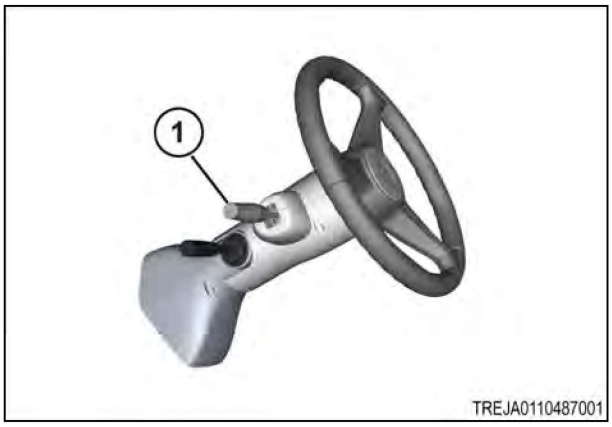

Fig. 11

3.6.8 Rotating beacon

The rotating beacons (1) alert others when roading. Rotating beacons must not be used while roading if local laws or regulations prevent use.



Fig. 12

3.6.9 Backlighting for switches in the cab

Backlighting switches in the following locations illuminates when the multifunction light switch is turned on:

- Headliner
- Right-hand console
- Right rear corner of the cab

3.7 Dash panel

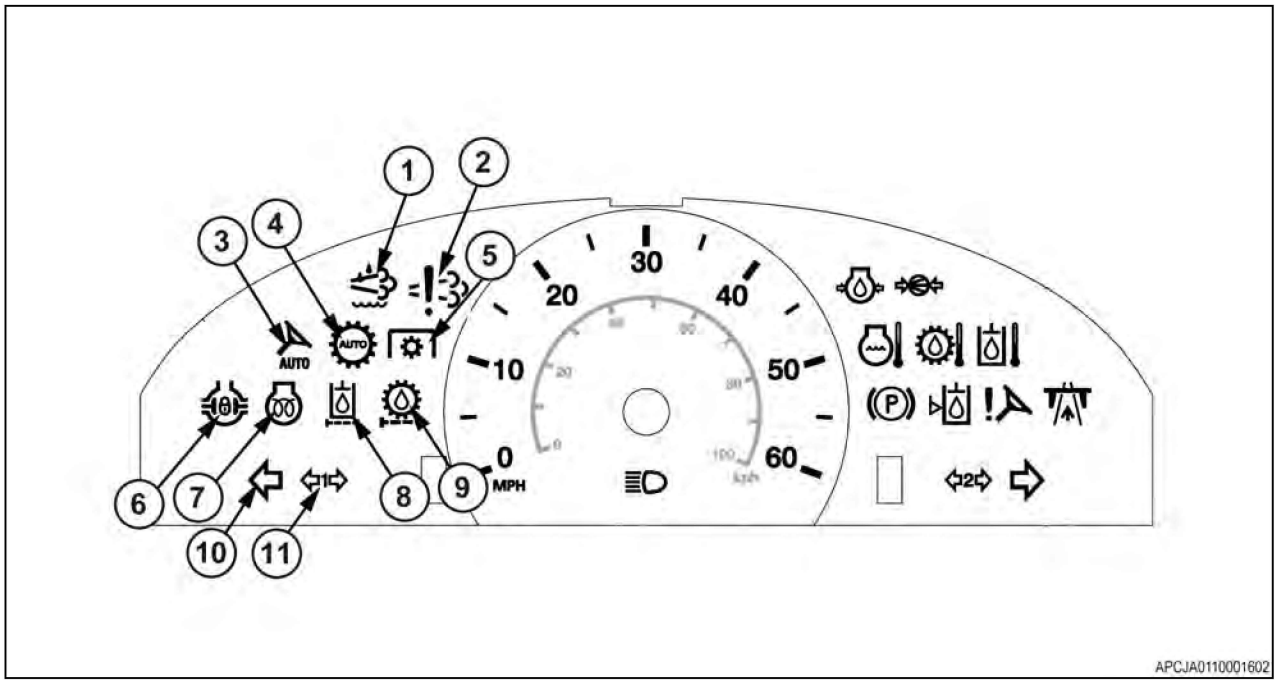

Fig. 13

Location	Status indicator	Color
1	Diesel exhaust fluid status - DEF	Amber - indicates low DEF level
2	SCR system malfunction lamp	Red - malfunctioning SCR system (stop the machine immediately)
3	Automatic steering - system status is ready but not active	White - ready not active
3a	Automatic steering - active	Green - indicator on when active
4	Automatic power management - cruise - if equipped	Green - power management status
5	PTO engagement - if equipped	Green - Rear power take off status
6	Differential lock - if equipped	Amber - differential lock status
7	Engine wait to start	Amber - grid heater status
8	Hydraulic oil filter	Amber - plugged hydraulic oil filter
9	Transmission oil filter - not currently used	Amber - plugged transmission oil filter
10	Left turn signal	Green - left turn signal is active on
11	1st trailer turn signal - not currently used	Green - turn signal active on

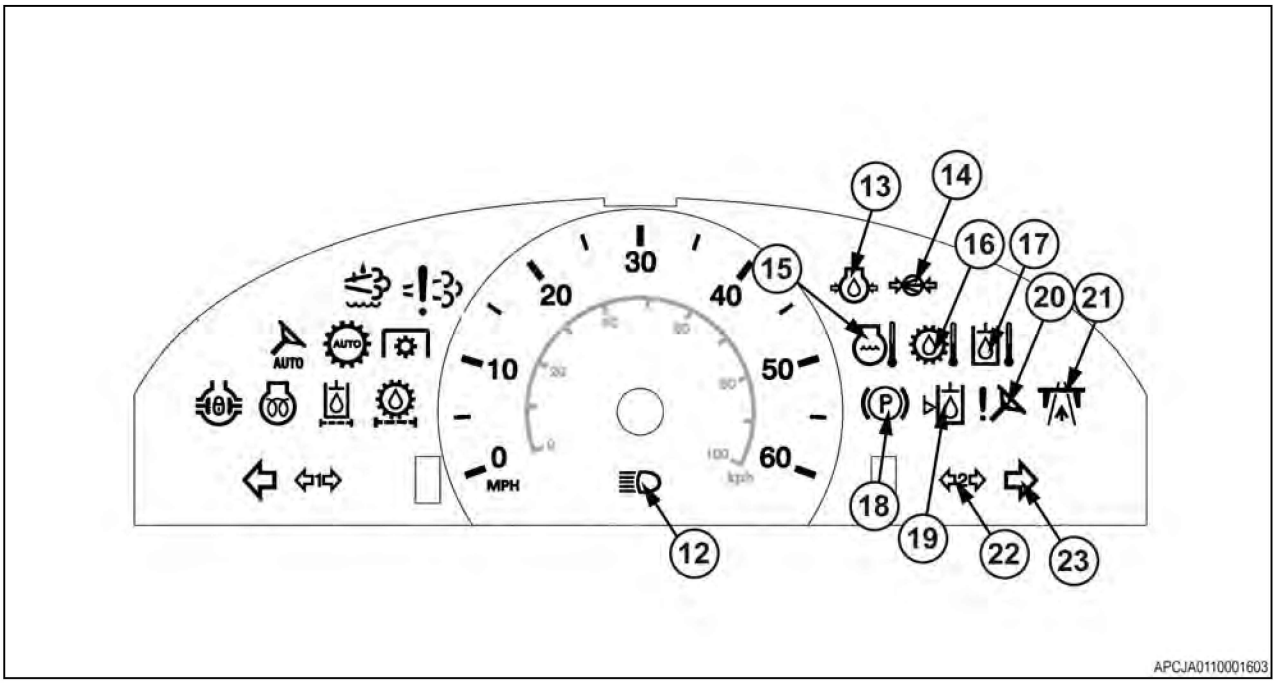

Fig. 14

Location	Status indicator	Color
12	High beam	Blue - high beam on
13	Engine oil pressure	Red - low engine oil pressure
14	Pneumatic supply pressure	Red - low pneumatic supply pressure
15	Engine coolant temperature	Red - high engine coolant temperature
16	Transmission oil temperature - not currently used	Red - high transmission oil temperature - at or above 99 °C (210 °F)
17	Hydraulic oil temperature warning	Red - high hydraulic oil temperature
18	Park brake	Red - park brake engaged
19	Hydraulic oil level warning	Red - low hydraulic oil
20	Steering system malfunction	Steering lamp comes on - indicating steering system malfunction
21	Roadway travel mode	Roading lamp comes on - indicating roading switch is on
22	2nd trailer turn signal - not currently used	Green - 2nd trailer turn signal on
23	Right turn signal	Green - right turn signal on

((24)) Engine coolant temperature - If engine overheating is indicated, stop engine as soon as practical and investigate the cause.

((25)) Engine oil pressure - If low engine oil pressure is indicated, stop engine as soon as practical to minimize the chance of engine damage from lack of lubrication.

((26)) Battery voltage - If system voltage is indicated above or below normal operating range, stop machine in a safe place and investigate cause.

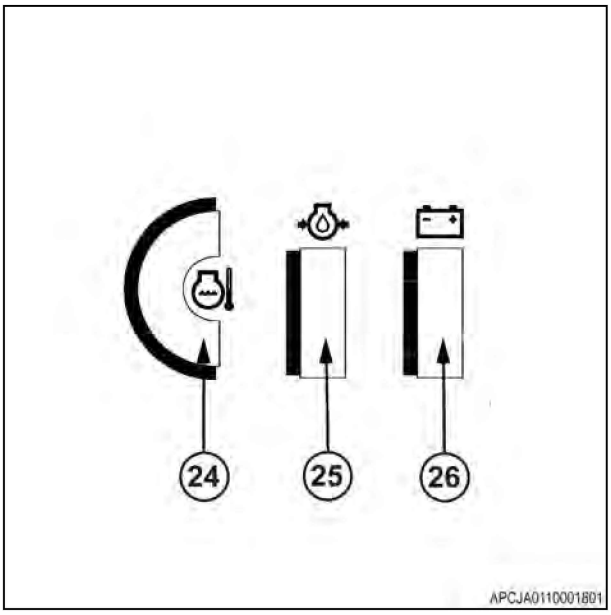

Fig. 15

((27)) DEF (Diesel exhaust fluid) - This display will show the visual indication of the DEF level. The gauge will have a red below normal range from 0% to 20% and a green normal range from 20% to 100%. When DEF level is less than 10% the remaining LCD segment will flash. When DEF level is 0% there will be no LCD segments displayed.

((28)) Fuel gauge - This display will show the visual indication of the fuel level. When bar graph is in the red low range the remaining LCD segments will flash.

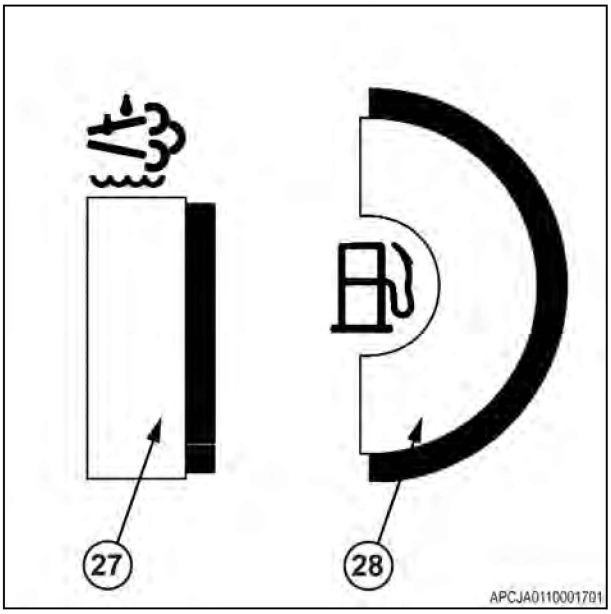

Fig. 16

3.8 Steering wheel

3.8.1 Horn

The switch for the horn is in the center (1) of the steering wheel. Put the key in the run/on position to use the horn. Push the center of the steering wheel to actuate the horn. Use the horn to alert personnel.

NOTE: *Honk the horn two times to alert others and to prevent injury.*

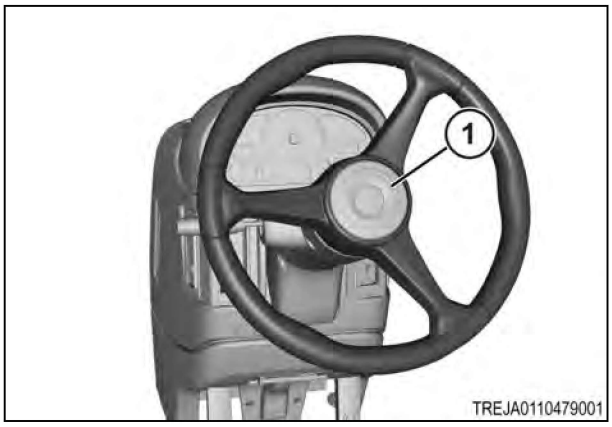

Fig. 17

3.8.2 Steering wheel tilt lever

Pull the lever (1) toward the operator to tilt the steering wheel to the desired position.

Push the lever (1) away from the operator. Push the center of the steering wheel to move the steering column in.

Push the lever(1) away from the operator. Pull the center of the steering wheel to move the steering column out.

NOTE: *The steering wheel will telescope easier when pushed/pulled at the center of the steering wheel versus when pushed/pulled at the edges of the steering wheel.*

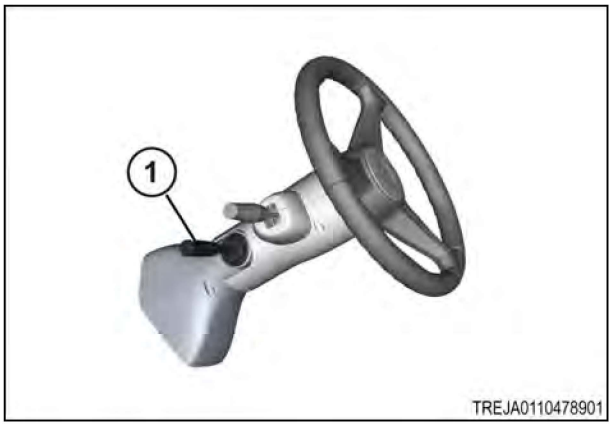

Fig. 18

3.9 Mirrors

3.9.1 Inside rear view mirror

The inside rear view mirror (1) is on the front right cab post. Adjust the mirror to see the implements while operating the machine.

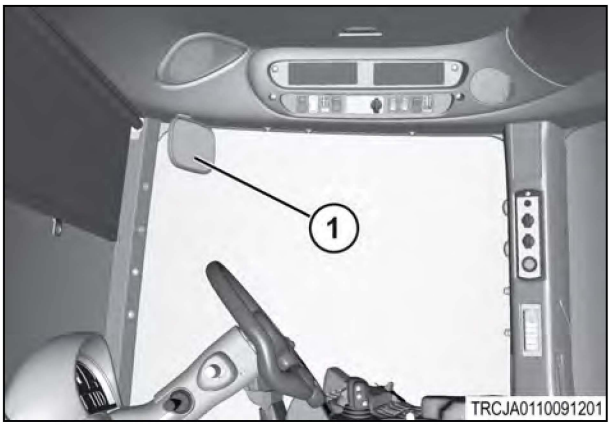

Fig. 19

3.9.2 Outside rear view mirrors

There are heated, external mirrors (1) that are electronically adjustable from the cab.

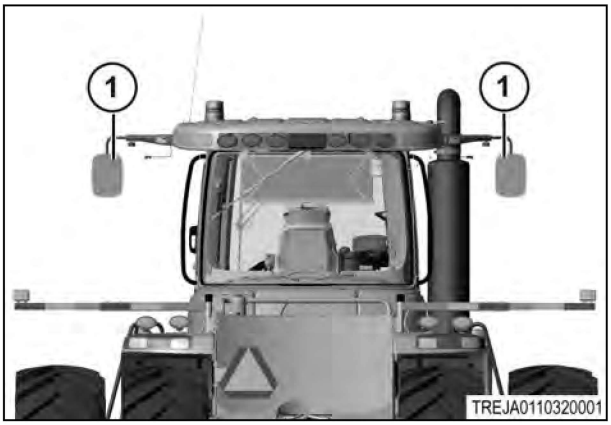

Fig. 20

3.10 Radio

The cab comes pre-wired to accept:

- AM/FM weatherband
- Deluxe AM/FM weatherband single-CD/MP3, Blue-tooth, USB
- Deluxe AM/FM weatherband single-CD/MP3, Blue-tooth, USB, XM

Refer to radio operator manual.



Fig. 21

3.10.1 Blue tooth microphone

The machine has a built in blue tooth microphone in the headliner (1) for hands free mobile device communication. During a blue tooth call, the blue tooth audio will be heard in the front left-hand speaker. The rest of the speakers will be muted.



Fig. 22

3.11 Storage and literature compartments

A storage compartment is under the lid(1) at the left, rear corner of the cab. The lid is behind the instructor's seat. The storage compartment can be for cool storage when the air conditioner is on.

There is an additional storage compartment under the lid (2) on the right side operator armrest.

There are literature holders to the left of the seat (3) and behind the seat (4).

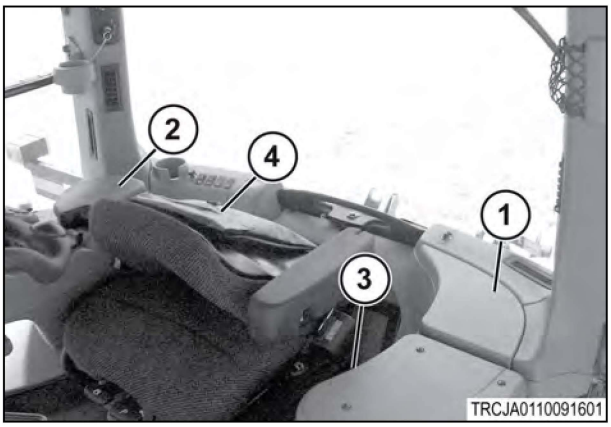

Fig. 23

3.12 Operator seat

3.12.1 Armrest adjustment

Reposition the armrest to suit the operator's preference and then tighten levers to lock in place. Turn the levers (1) forward to loosen.

NOTE: *Handles can be repositioned by pulling outward, rotating to the new position and releasing.*

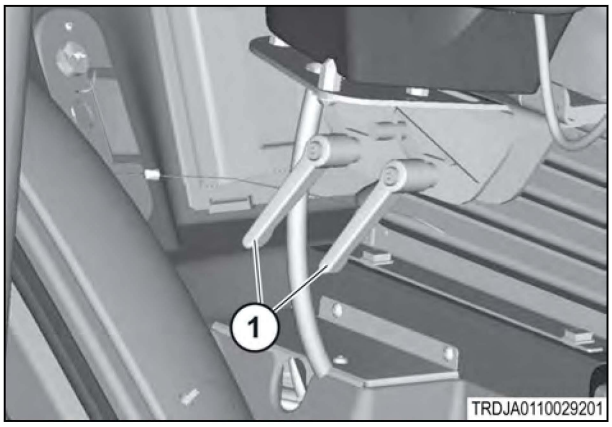

Fig. 24

3.12.2 Standard operator seat



Fig. 25

Standard seat adjustments and controls			
Callout	Icon	Title	Description
1		Swivel lock-out control	The switch lock-out control lets the seat swivel freely or lock in position. There are three swivel positions: center, 8° left, or 24° right.
2		Adjustable damper control	Changes the ride stiffness. The lever has 5 positions for ride stiffness.
3		Lateral isolation lock-out	Push the lateral isolation lock-out control down to let the seat move from side to side. Pulling the control up locks the seat in position.
4		Fore-AFT isolation lock-out	Push the Fore-AFT isolation lock-out control down to let the seat move Fore and AFT. Pulling the control up locks the seat in position.
5		Fore-AFT slide control	Pulling the Fore-AFT slide control up moves the seat forward or rearward. The seat moves in 10 mm .039 inch increments. Release the control to lock the seat in position.
6		Backrest tilt control	Lift the control to tilt the backrest to the desired position. Release to lock in position.
7	No symbol on seat	Armrest tilt control	The armrest tilt control rotates to change the desired tilt of the armrest.

Standard seat adjustments and controls			
8		Lumbar adjustment control	Turn the knob clockwise to increase support. Turn the knob counterclockwise to decrease support.
9		Height adjustment control	Press and hold the top of the switch to raise the seat. Release the switch at the desired height. Press and hold the bottom of the switch to lower the seat. Release the switch at the desired height.
10	No symbol on seat	Arm flip up	Arm rotates up 110°

3.12.3 Deluxe heated - vented seat

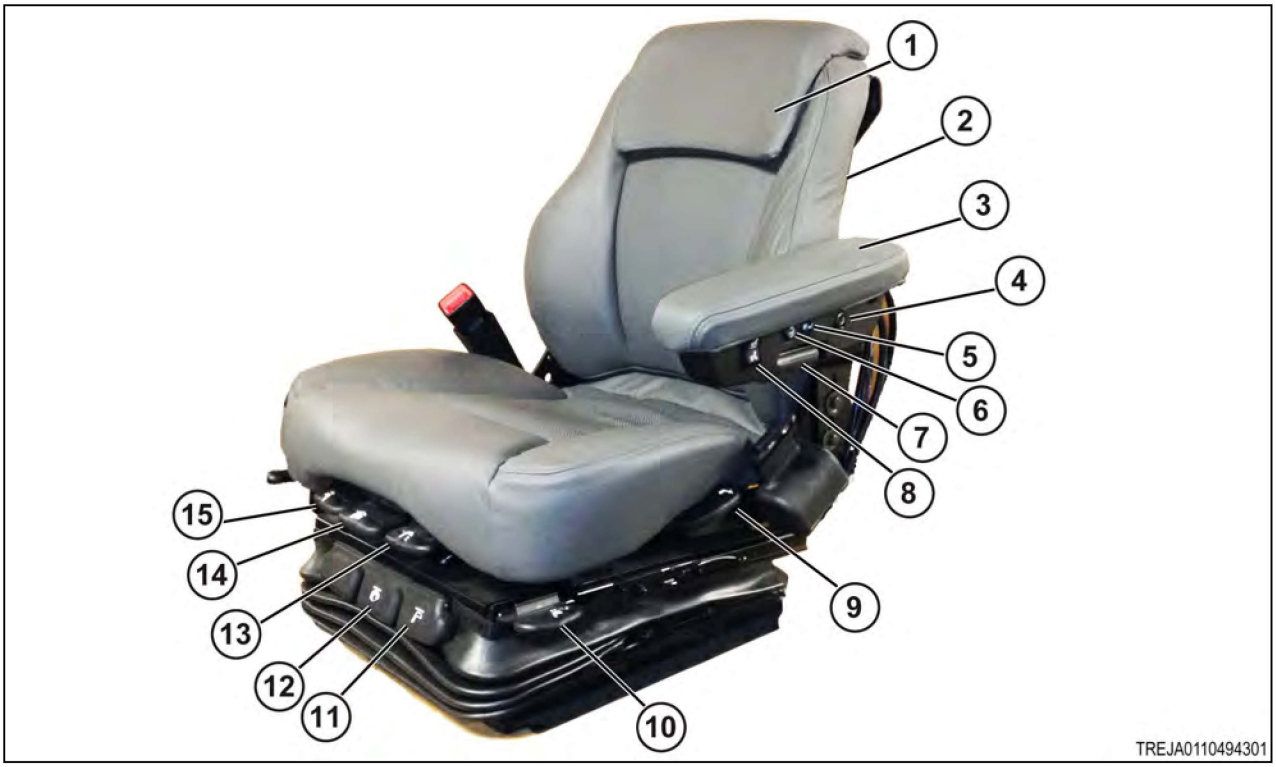

Fig. 26

Callout	Icon	Title	Description
1	No symbol on seat	Upper backrest height adjust	Lift for height adjust
2		Lumbar adjustment control	Rotate for lumbar adjust
3	No symbol on seat	Arm flip up	Arm rotates up 110°
4		Ride control	Toggle up for most firm, down for least firm

Callout	Icon	Title	Description
5		Heat selector	Toggle to select heat fans
5		Vent selector	Toggle to select ventilation fans
6		Heat - vent level	Toggle up for high, down for low, middle for off
7	No symbol on seat	Arm angle adjust	Rotate for arm angle adjust
8		Weight - height adjustment	Push up to raise, down to lower
9		Rear recliner adjustment	Lift to adjust rear recline
10		Fore- aft slide adjustment	Lift to slide seat top fore-aft
11		Fore-aft isolation	Push in for fore/aft isolation, pull up to lock isolator
12		Lateral isolation	Push in for lateral isolation, pull up to lock isolator
13		Seat cushion tilt adjustment	Lift to tilt cushion
14		Swivel lock-out control	The switch lock-out control lets the seat swivel freely or lock in position. There are three swivel positions: center, 8° left, or 24° right.
15		Seat cushion extention	Lift to slide cushion fore/aft

3.12.4 Instructor seat

IMPORTANT: *Do not use the instructor seat as a passenger seat for adults or children. The instructor seat is for machine operation training, instruction, and machine service related diagnostic purposes only.*

The persons using the operator seat and the instructor seat must use the seat belts provided. Seat belts must be worn at all times during the machine operation.

Fasten the seat belt catch (1) into the buckle (2) to fasten the seat belt.



Fig. 27

3.12.5 Seat belts

The seat belt is equipped with an automatic retractor lock. The retractor will lock if the seat belt is pulled suddenly.

Fasten seat belt catch (1) into buckle (2). Make sure seat belt is placed low across operator's lap.

WARNING:
When using retractable seat belts, do not use seat belt extensions or personal injury or death could result. Retractor system may or may not lock up depending on extension length and size of person. If retractor does not lock up, seat belt will not retain operator.

WARNING:
Make sure the seat belt is placed low across operator's lap. Never wear a seat belt loosely or with slack in the belt system. Never wear a seat belt in a twisted condition or pinched between the seat structural members. Replace seat belts when worn or broken.



Fig. 28

3.12.6 Operator presence functionality

An alarm is activated when:	Results	Correction
Neutral or Moving	If tractor is in neutral or a forward or reverse gear, an alarm will sound.	Operator must return to seat, and put tractor in Park.
The implement valve is active	The alarm will sound. The valve will continue to operate.	Operator must return to the seat or move the hydraulic fingertip control to the blocked position. Blocking the flow of hydraulic oil.
The PTO is engaged	Alarm will sound. PTO function will continue.	The switch on the armrest may need to be reset.
The guidance is active	The guidance system will be disengaged.	If operator presence switch is open for ten consecutive seconds, the guidance controller will need to be reset.
The One-Touch sequence is active	The sequence will stop and advance to the next pause/beep instruction.	If One-Touch is stopped during a sequence, it will resume at the interrupted point, at the next activation.

3.13 Storage compartment and tool box

The machine is equipped with a storage compartment, and an optional tool box (1). The storage compartment is located on the right-hand side of the machine behind the stairs.

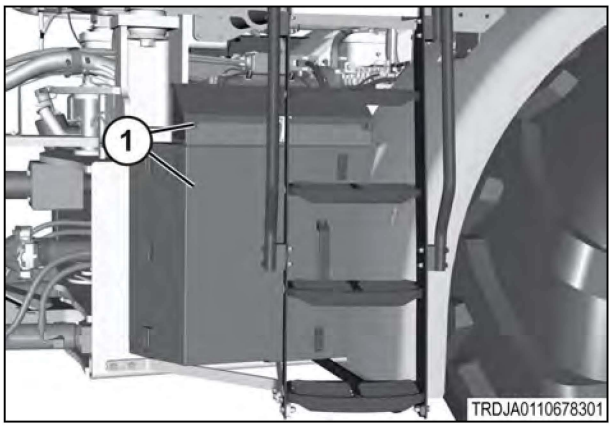

Fig. 29

3.14 Heating and air conditioning controls

3.14.1 Automatic temperature controls

16 to 32 degrees C (60 to 90 degrees F)

The Mode control switch (1), controls the discharge of airflow. The heater and the air conditioner turn on when the mode switch rotates clockwise from the off position to the following modes:

- Off (2)
- Head-Foot (3)
- Head-Foot-Defrost (4)
- Defrost (5)

The LED display (6) illuminates when the mode control switch is in the (3), (4), or (5) positions. The defrost mode enables the air conditioner and the heater. The air conditioner removes moisture from the air while the heater warms the cab air. The air conditioner also reduces the humidity in the cab.

Press the temperature up button (8) to increase the temperature in the cab.

Press the temperature down button (7) to decrease the temperature in the cab.

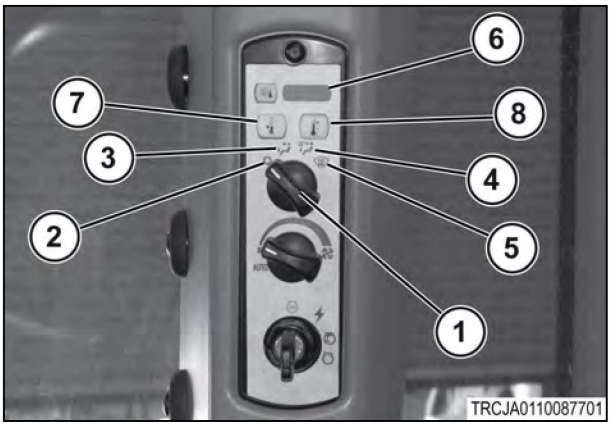

Fig. 30

The outside temperature button (9) displays the outside temperature. The LED display (6) displays the temperature while holding the button down. The LED shows the temperature for five seconds after releasing the button.

The operator can change the temperature units from degrees F to degrees C. Push the outside temperature button (9) and the temperature up button (8) at the same time to change the unit. Push the outside temperature button (9) and the temperature down button (7) at the same time to toggle to other units.

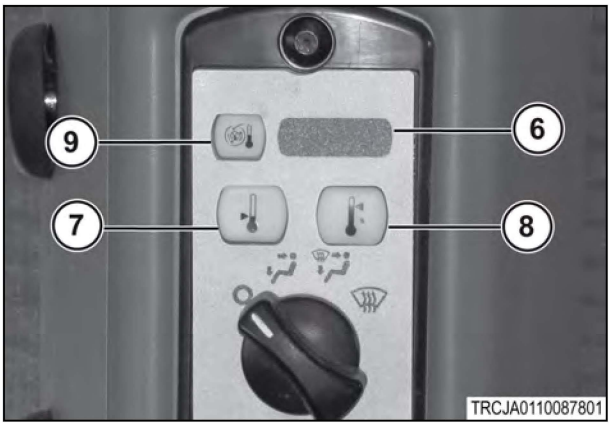

Fig. 31

The fan operates whenever the engine start switch is in the run position. When the fan speed control (10) is in the automatic position (11), the system is in the automatic temperature control mode. This includes the automatic control of the blower fan speed. When the rotary switch turns clockwise from the automatic position, the operator can control the speed of the fan manually.

NOTE: *The fan must be operated at all times to give cab pressurization and to keep out dust.*

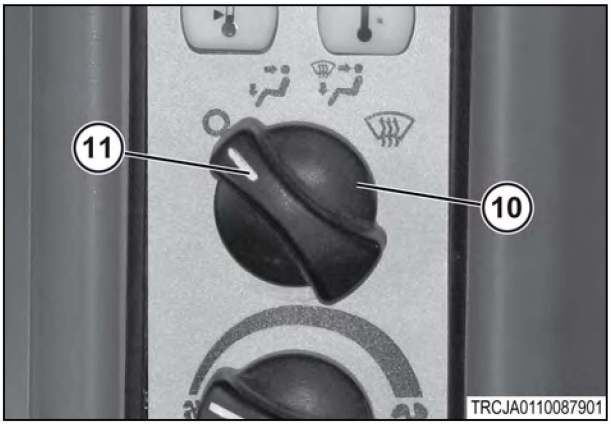

Fig. 32

3.14.2 Manual temperature control system

NOTE: *For defrost, operate air conditioning and heating simultaneously to aid in defrosting windscreen. Air conditioner removes moisture while heater warms cab air.*

The fan operates whenever engine start switch is in run position or in accessory position. Fan provides cab pressurization to minimize entrance of dust. When possible, operate machine with windows closed to keep cab pressurized.

To activate air conditioning system push in A/C switch (1). Push in switch again to allow button to extend and turn off air conditioning.

Four fan speeds are available. Turn fan speed dial (2) fully counterclockwise to select low or clockwise to select high or purge settings.

Temperature control dial (3) adjusts blend of heated and cooled air. Turn switch clockwise for warmer air or counterclockwise for cooler air.

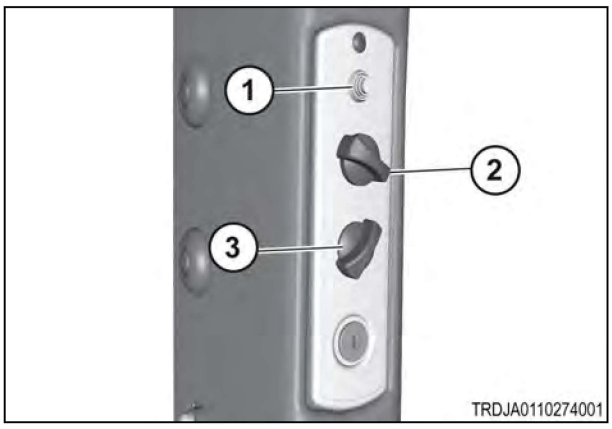

Fig. 33

3.15 Vent locations

There are vents (1) located on each side of the steering console.

There is a vent (2) located above the operator's feet.

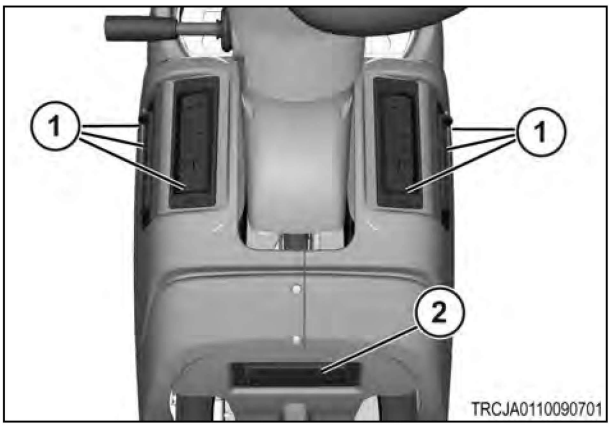

Fig. 34

There is a vent (1) located in front of the steering console and next to the front window.

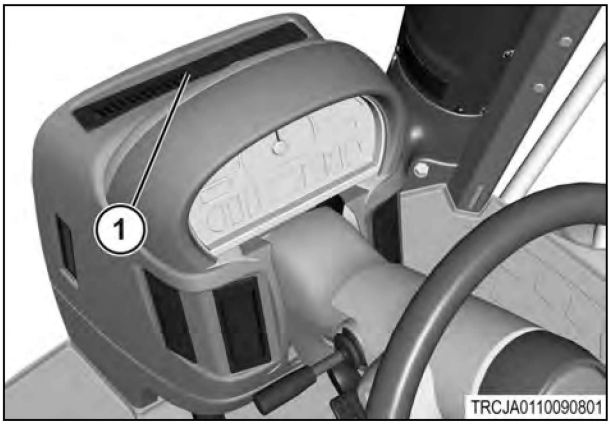

Fig. 35

There are vents (1) located on the right side cab support.

There is a vent (2) located near the rear window on the left side of the cab.

There is a vent (3) located on the cab support on the left side of the cab.

There is a vent (4) located on the left side of the instructional seat.

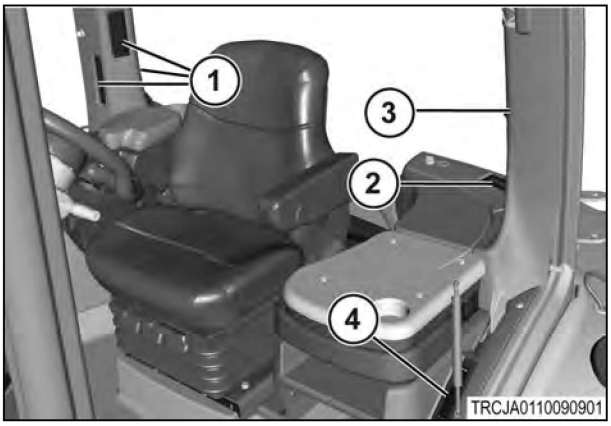

Fig. 36

3.16 Machine management center

3.16.1 Terminal

The terminal shows the machine operation information.

To navigate to different screens and screen selections, use the scroll wheel(1), and the scroll wheel select button (2).

The hard keys (3) are used to select the icons within the screens.

The home selection button (4) will take you back to the main menu. The selection button (5) will let you move back and forth between work sets. The escape selection button (6) will take you back one screen.

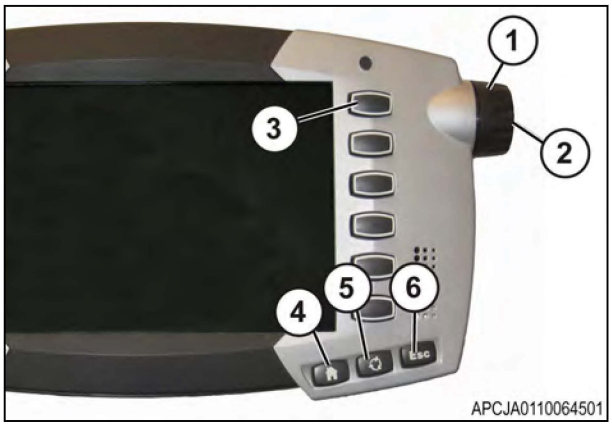

Fig. 37

The terminal display provides operator with:

- Operating characteristics of machine
- Diagnostics
- Warning events
- Modes of operation
- Instantaneous information
- Information on machines condition and performance are being collected

NOTE: *The operator can adjust many of the settings necessary for machines application.*

Use of the machine management center is necessary to adjust:

- Three point hitch
- PTO
- Hydraulic control valve
- AUTO-GUIDE satellite navigation

NOTE: *If a warning event occurs, a detailed message shows on the terminal. Check monitor indicator on the dash and an alarm alerts the operator to check the machine management center.*

3.16.2 Machine management center version information

Use the scroll wheel to highlight the system configuration icon (1) and press the scroll wheel button.

NOTE: *The home screen may differ depending on what software is loaded.*

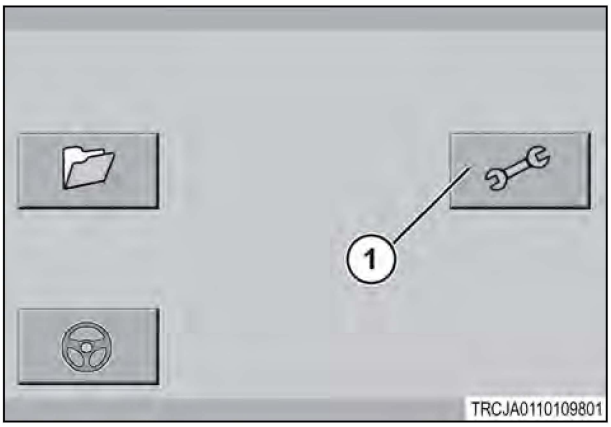

Fig. 38

The machine management center version information shows in the version box (1).



Fig. 39

3.16.3 Setting the measurement units

Procedure

1. Select the icons in this sequence:



2. Select the measurement settings.

° One unit type for all measurements (1).

 Imperial

 Metric

 United States

° If necessary, set different units for each measurement type (2).

3. Select  (3).

4. Select **Esc** to go to the system configuration main screen.

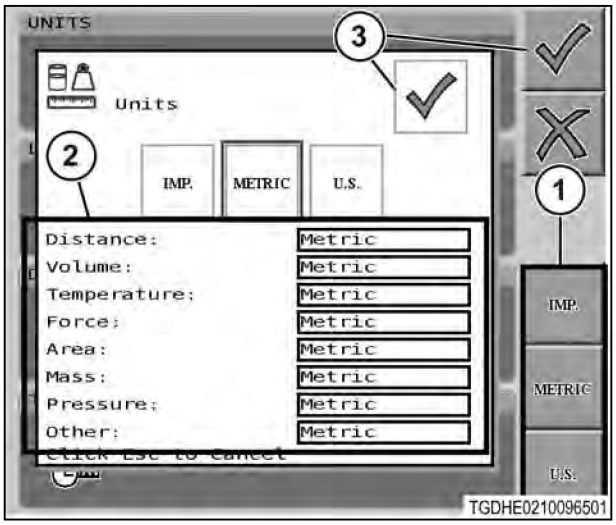

Fig. 40 Software version 1.7 to 2.0

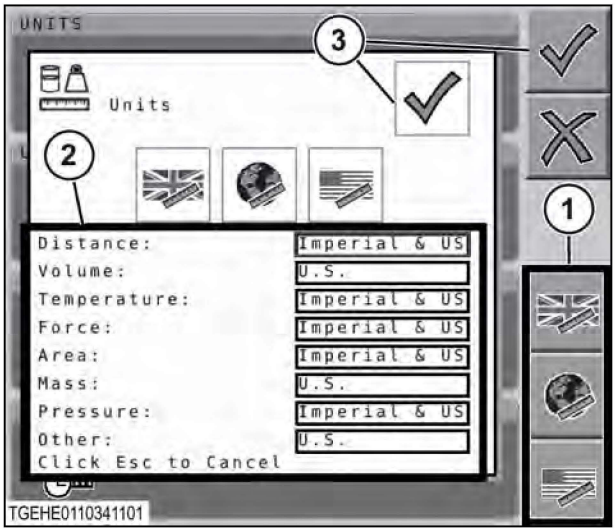

Fig. 41 Software version 3.0 and after

3.16.4 Setting the language

Procedure

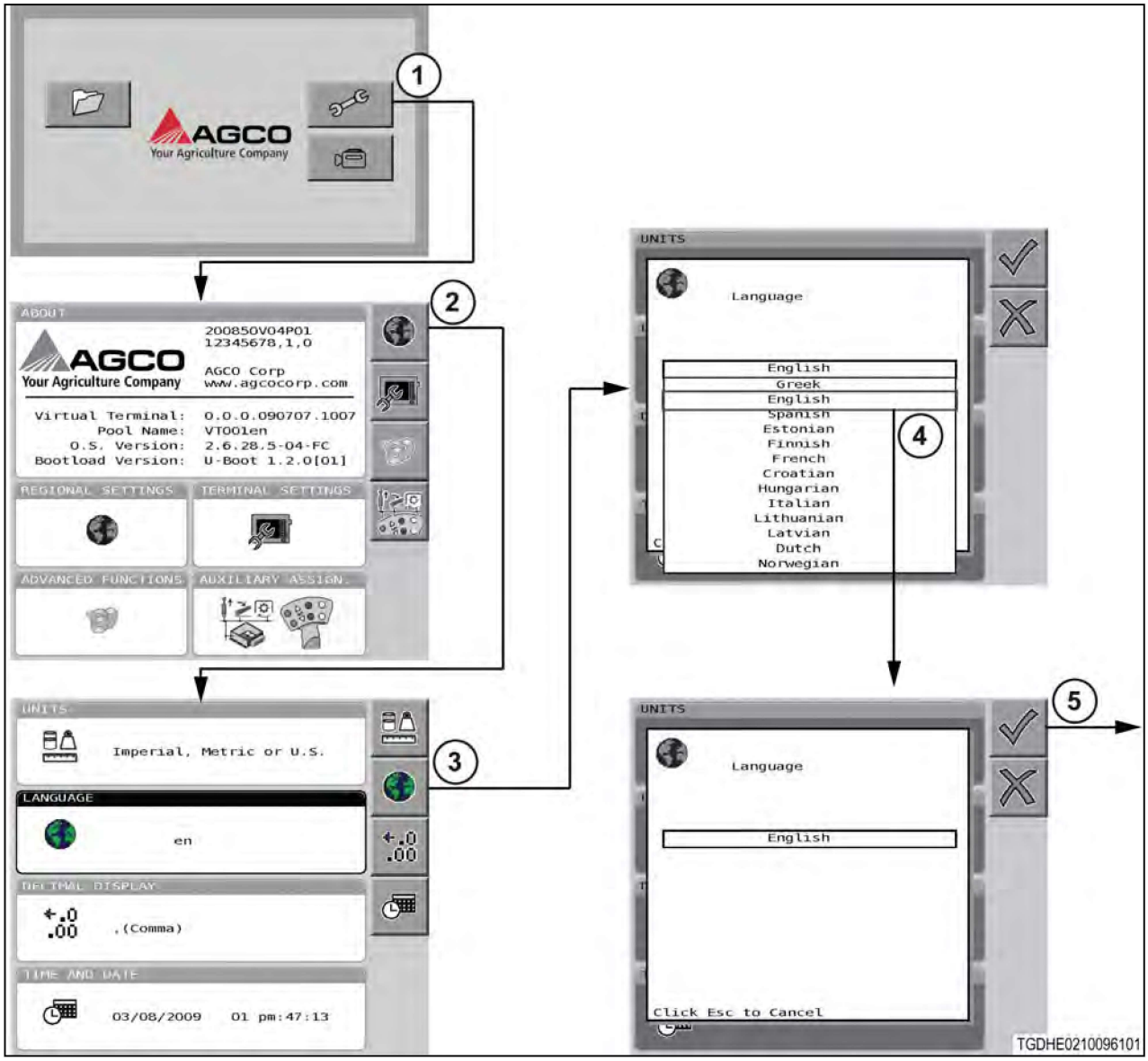

Fig. 42

1. Select  (1).
2. Select  (2).
3. Select  (3).
4. Select the necessary language from the drop-down list (4).

   NOTE: *Not all languages shown are used by all applications on the terminal.*
5. Select  (5).
6. Select **Esc** to go to the system configuration main screen.

3.16.5 Setting the decimal display

NOTE: *This procedure is for software version 3.1 and before.*

Procedure

1. Select the icons in this sequence:



2. Select the necessary decimal display from the drop-down list (1).
3. Select  (2).
4. Select **Esc** to go to the system configuration main screen.

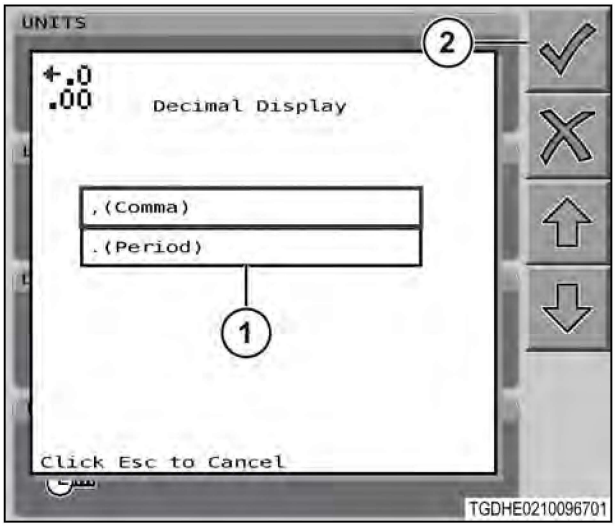

Fig. 43

3.16.6 Set the time and date

Procedure

1. Select the icons in this sequence:



2. Select the box (1) below **Set Date Type**.

Date type	Selection
Month/date/year	12/31/2008
Month/year/date	12/2008/31
Date/month/year	31/12/2008
Date/year/month	31/2008/12
Year/month/date	2008/12/31
Year/date/month	2008/31/12

3. Select a date format.
4. Select the boxes (2) below **Current Date** and enter the date.
5. Select the box (3) below **Set Time Type**.
   - 24 hr
   - 12 hr (am/pm)
6. Select a time format.

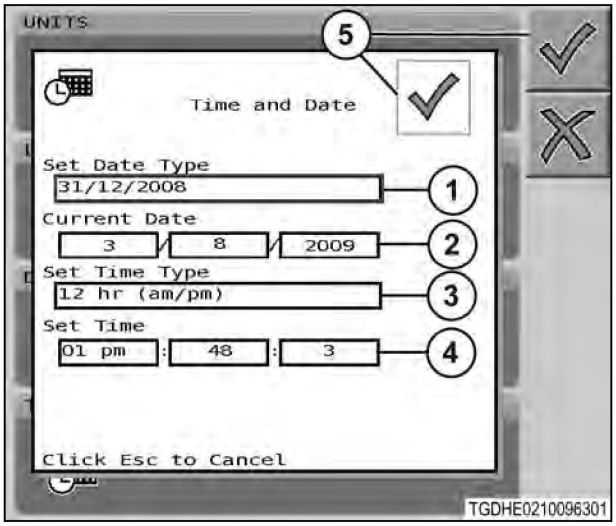

Fig. 44

7. Select the boxes (4) below **Set Time** and enter the correct time.
8. Select  (5).
9. Select **Esc** to go to the system configuration main screen.

3.16.7 Terminal settings

1. Use the scroll wheel to highlight the system configuration icon (1) and press the scroll wheel button.

   NOTE: *The home screen may differ depending on what software is loaded.*

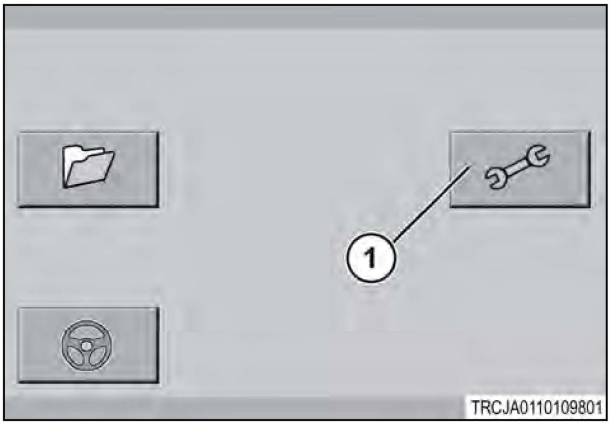

Fig. 45

2. Select the terminal settings by scrolling to the terminal settings box (1) to highlight the selection. Press the scroll wheel button to select it, or press the hard key next to the terminal settings icon (2).

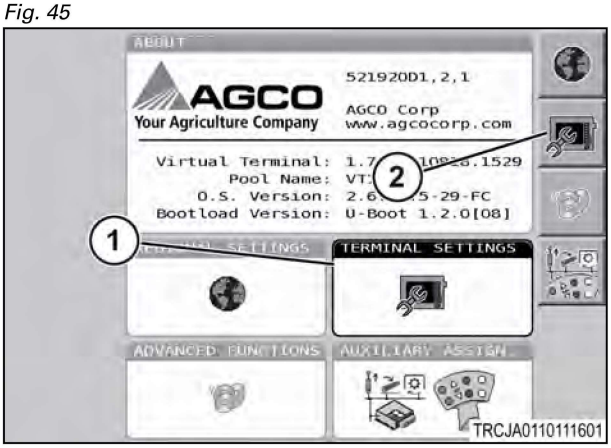

Fig. 46

3. Select the sound by scrolling to the set sound box (1) to highlight the selection. Press the scroll wheel button to select the selection.

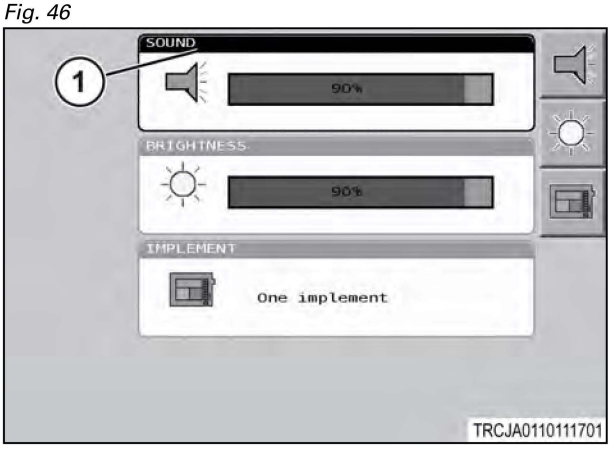

Fig. 47

4. Use the scroll wheel to set the audio level of the machine management center speaker. Press the scroll wheel button or the hard key adjacent to the checkmark icon (1) to select the setting. Press the hard key adjacent to the X icon (2) to cancel the selection.

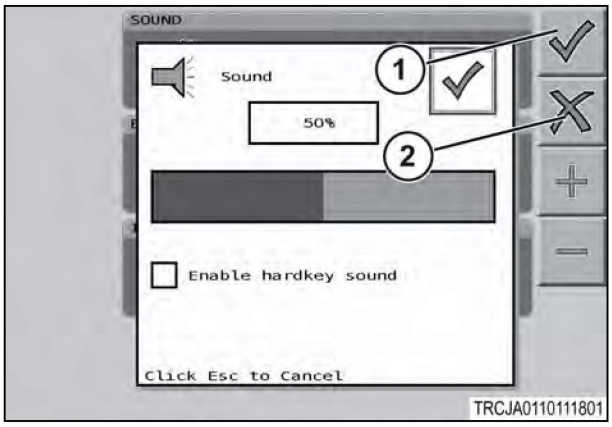

Fig. 48

5. Select the set brightness by scrolling to the set brightness box (1) to highlight the selection. Press the scroll wheel button to select the selection.

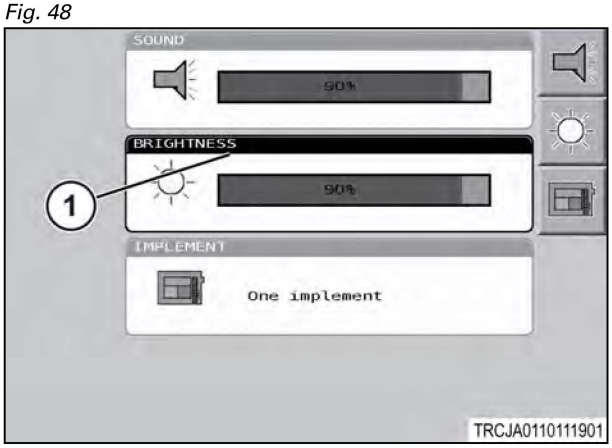

Fig. 49

6. Use the scroll wheel to set the brightness level of the machine management center display. Press the scroll wheel button or the hard key adjacent to the checkmark icon (1) to select the setting. Press the hard key adjacent to the X icon (2) to cancel the selection.

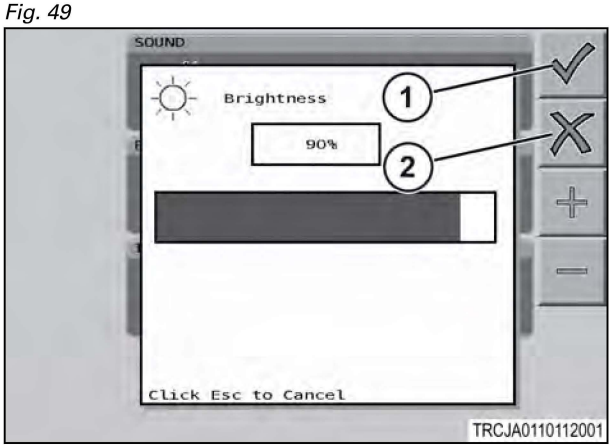

Fig. 50

7. Select the implement layout by scrolling to the implement layout box (1) to highlight the selection. Press the scroll wheel button to select the selection.

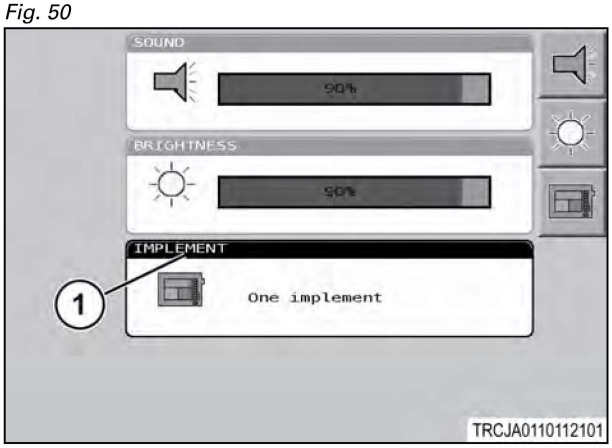

Fig. 51

8. Select the one/two implement setup by scrolling through the drop down list to highlight a selection (1). Press the scroll wheel button or the hard key adjacent to the checkmark icon (2) to select the setting. Press the hard key adjacent to the X icon (3) to cancel the selection.

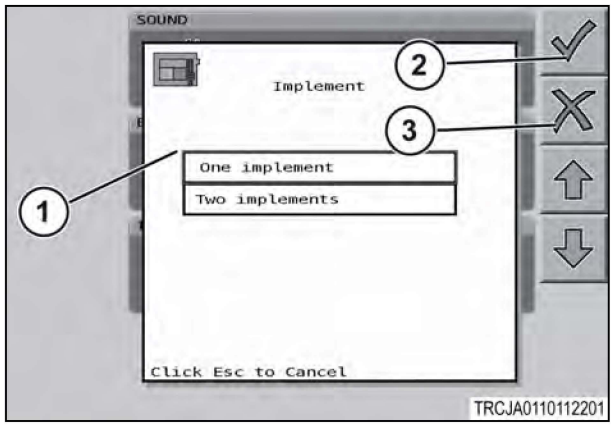

Fig. 52

3.16.8 Applications

Procedure

1. Use the scroll wheel to highlight the system configuration icon (1), and press the scroll wheel button.

NOTE:
The home screen can look different, depending on the different software installed.

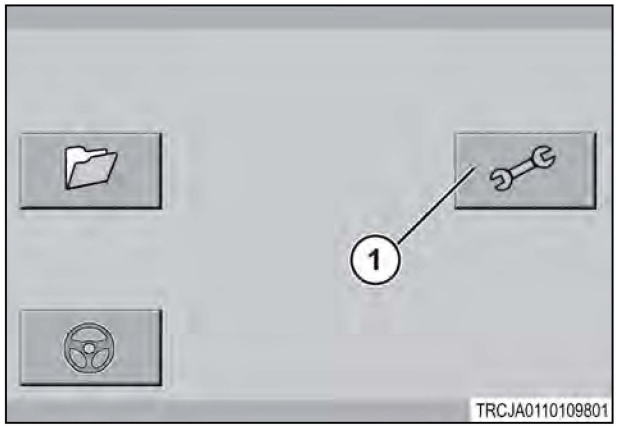

Fig. 53

2. Select the applications by scrolling to the applications box (1) to highlight the selection. Press the scroll wheel button to select it, or press the hard key next to the applications icon (2).



Fig. 54

3. The operator can start or disable additional options by scrolling to the highlighted selection (1). Press the scroll wheel button to toggle the selection on/off.

   - The file server stores the files of ISO implements.
   - The task controller is used to record data to and from the SD card.

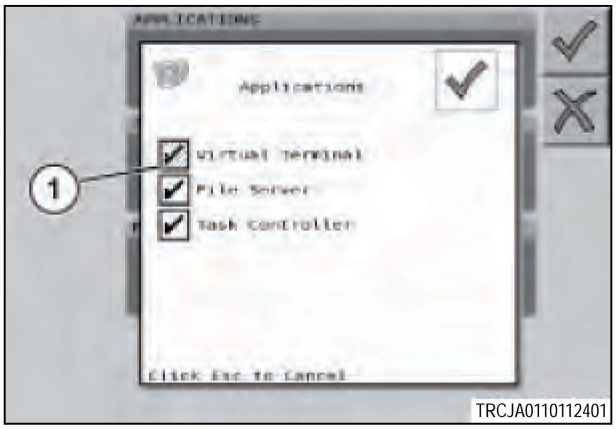

Fig. 55

4. **NOTE:**
   Do not delete stored object pools unless instructed by your authorized servicing dealer.

   Located in the lower portion of the screen (2) is the stored object pool name. This shows the software versions of the object pool which is important information for service. The object pools contain information, providing a user interface for the operator, that will allow interaction with other functions of the machine. To delete a single object pool, select (3). To delete all stored object pools at once, select (4).

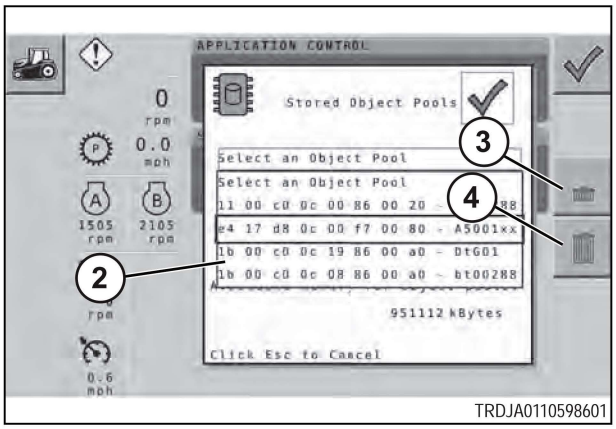

Fig. 56

3.16.9 Selecting an auxiliary input

For the auxiliary control, no option will be available unless there is an implement that can use the function.

This option is for software version 1.7.1 and earlier.

Procedure

1. Connect the implement harness to the terminal harness.
2. Connect the auxiliary input to the terminal harness.
3. Select .

   Result

   The Auxiliary Assignment screen will show any available auxiliary inputs.

   NOTE: *A round baler is shown as an example.*

4. Use the arrows (1) to select the type of auxiliary function (2).
5. Select **Assign** (3).
6. Use the arrows (4) to select the type of auxiliary input (5).
7. Select **Assign** (6).
8. Select **Esc** to return to the system configuration main screen.

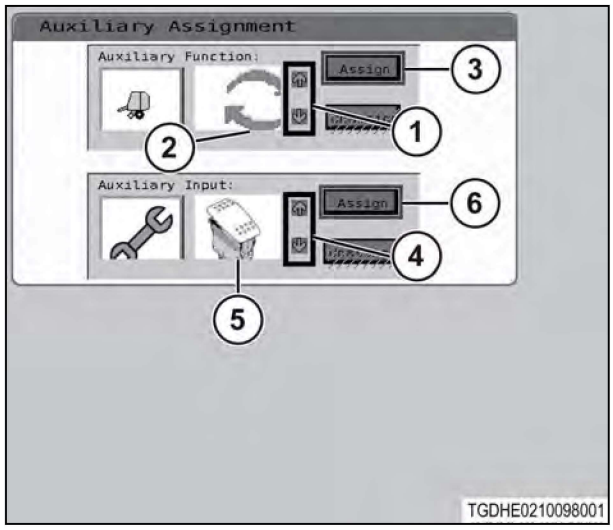

Fig. 57

3.16.10 Viewing screens

1. Engine screen
2. Transmission screen
3. Hydraulic valve(s) screen
4. Instant fuel field screen
5. Average fuel field screen
6. Power management screen
7. Settings screen
8. Headland management screen
9. Diagnostic trouble codes
10. Track tension
11. Hitch screen

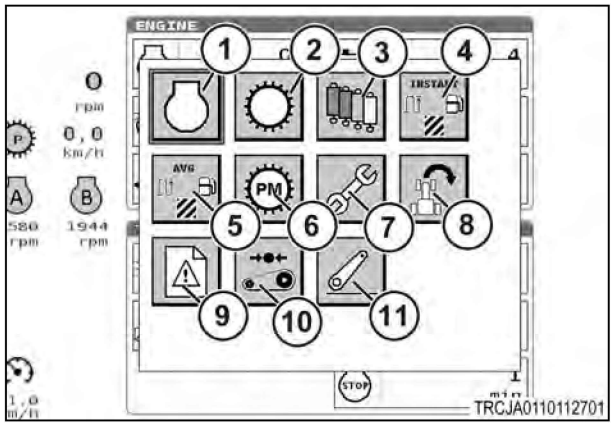

Fig. 58

3.16.11 Engine

Procedure

1. From the main menu, select a specific viewing screen by scrolling forward or rearward with the scroll wheel. To select the highlighted icon (1), push the scroll wheel button.

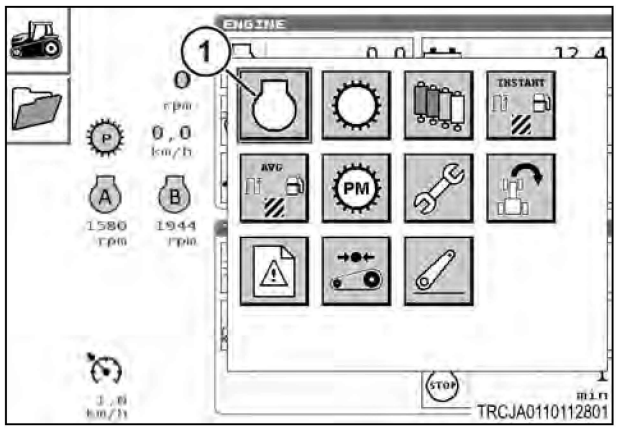

Fig. 59

2. The following information will show after selecting the engine icon:

- (1) Engine percentage load
- (2) Intake manifold temperature
- (3) Engine oil pressure
- (4) Battery voltage
- (5) Intake manifold pressure
- (6) Coolant temperature

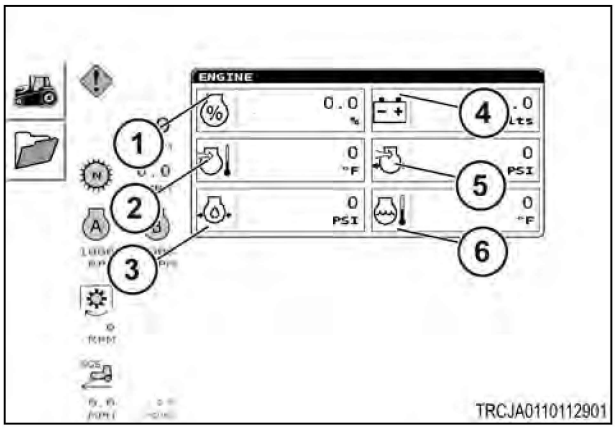

Fig. 60

3. From the main menu, select a specific viewing screen by scrolling forward or rearward with the scroll wheel. To select the highlighted icon (1), push the scroll wheel button.

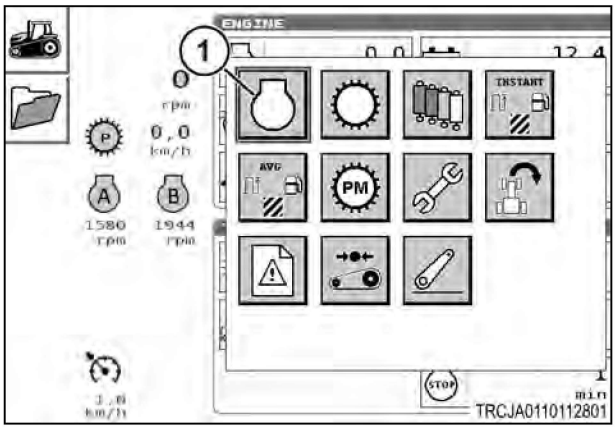

Fig. 61

4. After selecting the engine icon, push the hard key adjacent to the DEF icon (1) to move to the next screen.

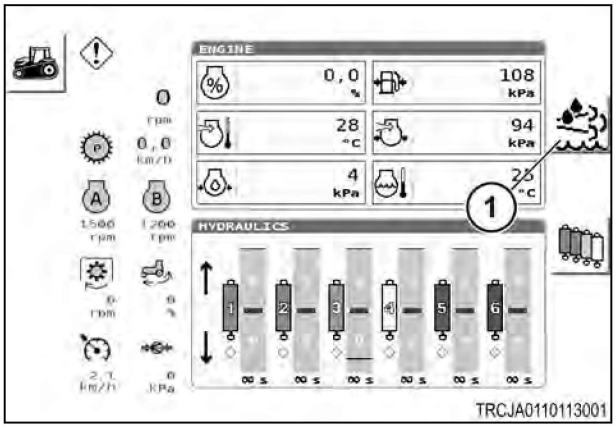

Fig. 62

5. The following information will show when viewing the DEF screen:

- (1) Exhaust temperature
- (2) DEF level
- (3) DEF heater status
- (4) Engine hours
- (5) DEF temperature
- (6) Fan speed

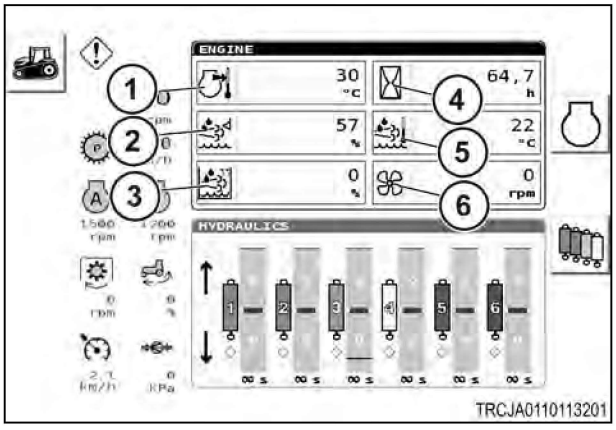

Fig. 63

3.16.12 Transmission

1. From the main menu, select a specific viewing screen by scrolling forward or rearward with the scroll wheel. To select the highlighted icon (1), push the scroll wheel button.

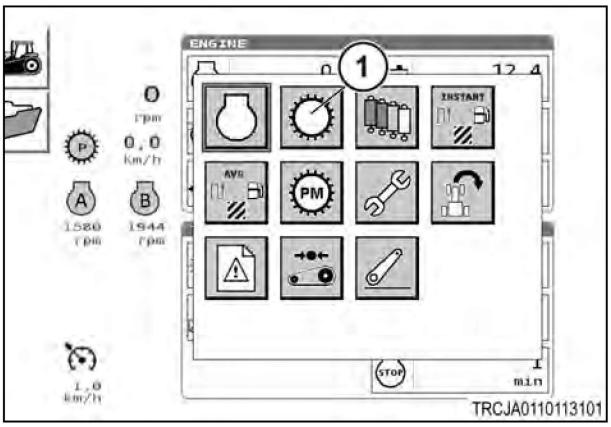

Fig. 64

2. The transmission screen displays the following information:

- (1) Current Gear
- (2) Vehicle speed
- (3) PTO speed
- (4) Selected gear
- (5) Transmission oil temperature

Push the hard key adjacent to the transmission icon (6) to move to the next screen.

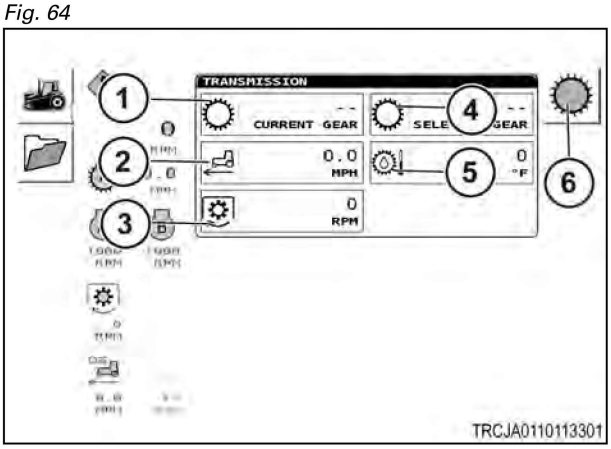

Fig. 65

3. To change the selections (1), use the scroll wheel to highlight the selected box, and press the scroll wheel button. Use the scroll wheel to scroll up or down to select the information, then press the scroll wheel button.

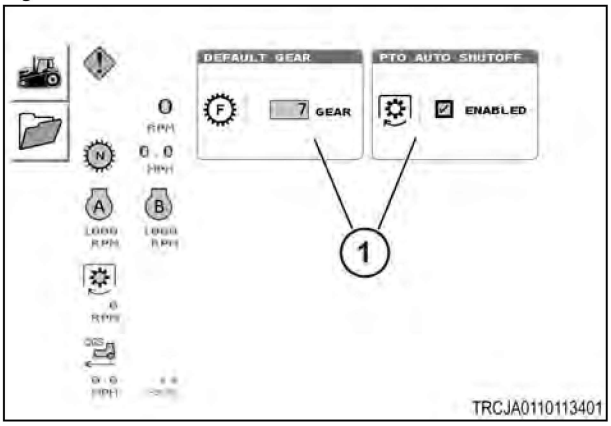

Fig. 66

3.16.13 Hydraulic

1. From the main menu, select a specific viewing screen by scrolling forward or rearward with the scroll wheel. Select the highlighted icon (1), by pushing the scroll wheel button.

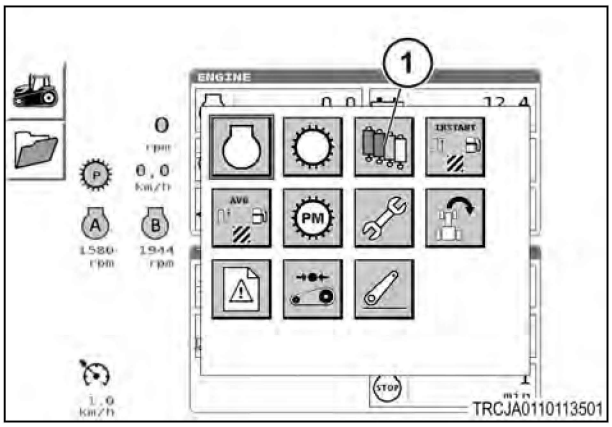

Fig. 67

2. To select the hydraulic settings screen, push the hard key adjacent to the hydraulic icon (1).

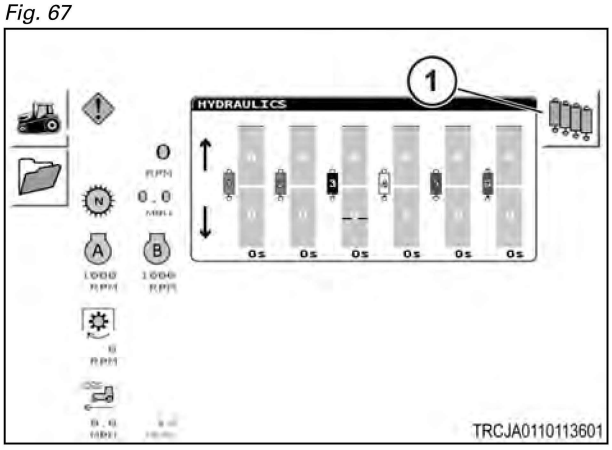

Fig. 68

3. To change each selection, use the scroll wheel to highlight the selected hydraulic valve, then press the scroll wheel button. Use the scroll wheel to scroll up/down to select the information, then press the scroll wheel button to select.

- (1) Hydraulic valve number
- (2) Detent time
- (3) Retract flow rate
- (4) Extend flow rate

To view information for a hydraulic valve, press the hard key adjacent to the hydraulic valve (5). Press the scroll wheel button to select.

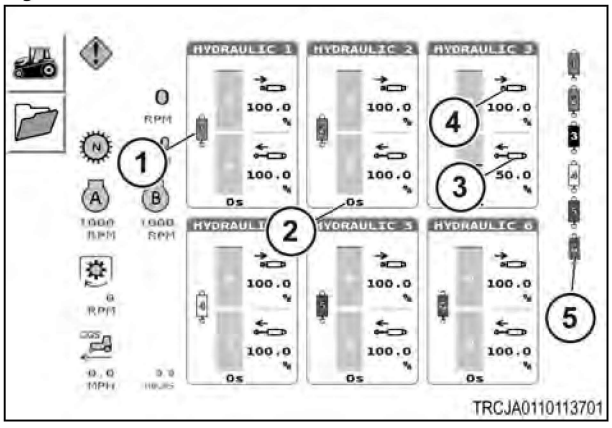

Fig. 69

4. To change each selection (1), use the scroll wheel to highlight the selected item, then press the scroll wheel button. Use the scroll wheel to scroll up/down to select the information, then press the scroll wheel button to select.

- (2) Retract port flow setting
- (3) Extend port flow setting
- (4) Detent time

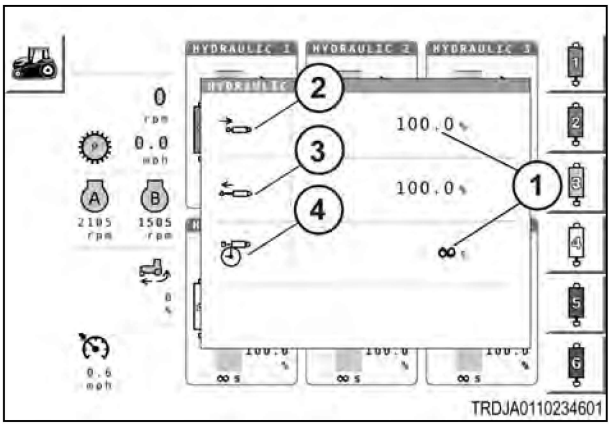

Fig. 70

3.16.14 Powertrain protection software (PPS)

The powertrain protection software (PPS) protects the powertrain from very low speed engine lug conditions. This software operates on demand, and requires no input from the operator.

If the tractor load lugs the engine speed below 800 rpm, the PPS will cause the transmission to shift to neutral. A message will show (1) on the machine management center.

After a PPS message occurs, move the shift lever to neutral. Increase the throttle setting if possible and select a lower gear before resuming operation.

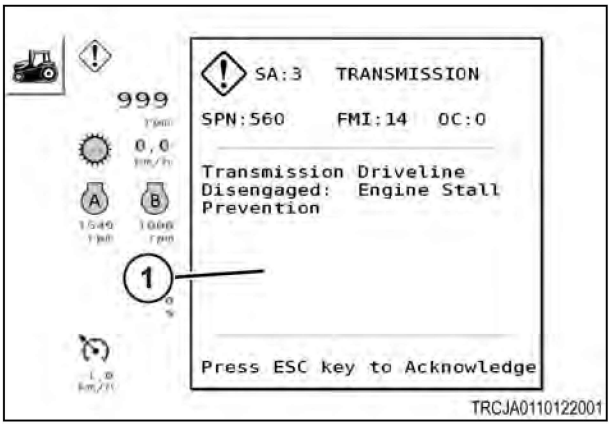

Fig. 71

3.16.15 Measure INST (instantaneous)

1. From the main menu, select a specific viewing screen by scrolling forward or rearward with the scroll wheel. To select the highlighted icon (1), push the scroll wheel button.

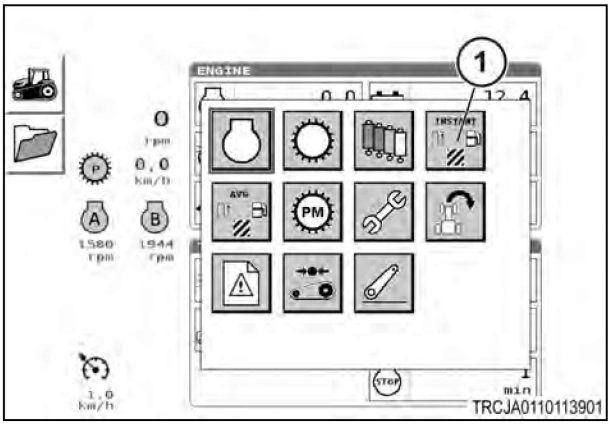

Fig. 72

2. The following information will show after selecting the measures - INST screen:

- (1) INST engine percentage load
- (2) INST area rate
- (3) INST fuel per area
- (4) INST fuel economy
- (5) INST fuel rate
- (6) INST power specific fuel economy

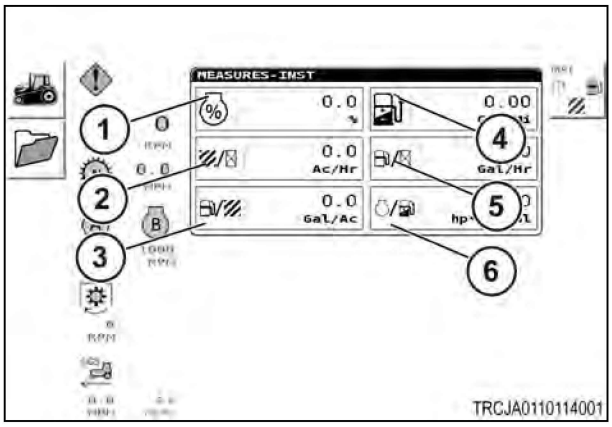

Fig. 73

3.16.16 Measures - field

1. From the main menu, select a specific viewing screen by scrolling forward or rearward with the scroll wheel. To select the highlighted icon (1) push the scroll wheel button.

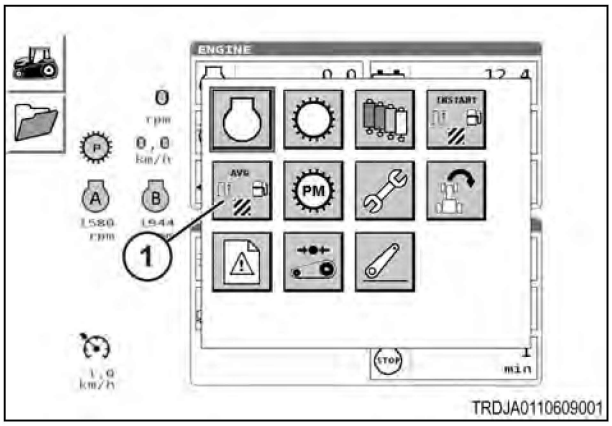

Fig. 74

2. The following information will show after selecting the measures - field icon:

- (1) Distance
- (2) Area
- (3) Engine percentage load
- (4) Field time
- (5) Fuel rate
- (6) Power specific fuel economy

To select the next screen, push the hard key adjacent to the measures - fuel icon (7).

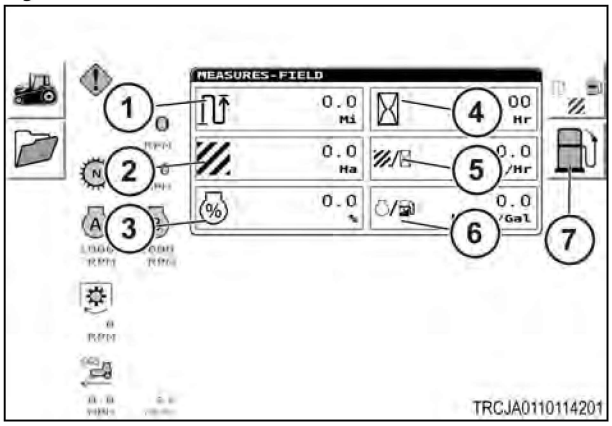

Fig. 75

3.16.17 Measures - fuel

After selecting the measures - fuel screen, the following information will show:

- (1) Fuel used
- (2) Engine idle time
- (3) Fuel burned idling
- (4) Fuel usage per distance
- (5) Fuel rate
- (6) Fuel per area

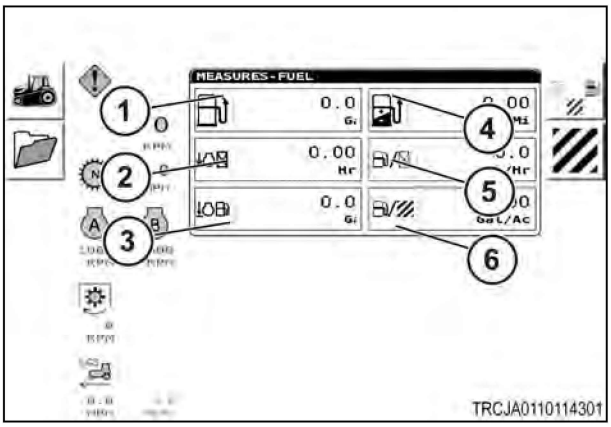

Fig. 76

3.16.18 Memory

Procedure

1. The memory viewing screen options are the INST (instantaneous) viewing screen (1) and the measure fuel screen (2).

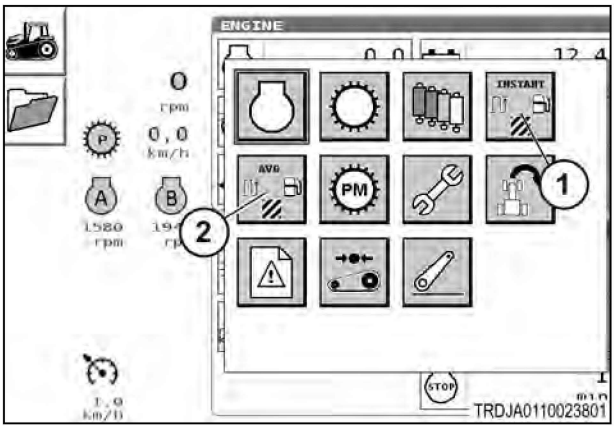

Fig. 77

2. Select a viewing screen by scrolling forward or rearward with the scroll wheel. To select the highlighted icon, push the scroll wheel button.

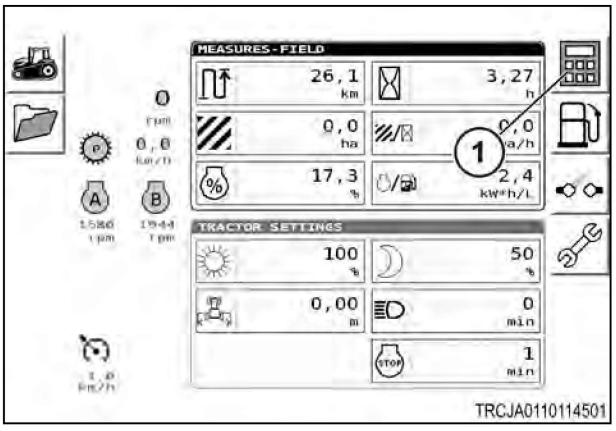

Fig. 78

3. Press the hard key to select the memory name application (1).

Use this application to keep the parameters of eight different implements.

It is possible to:

- Give a specific name to each of the eight implements
- Check, measure, and record the parameters when an implement is in use

This screen displays the eight memories and any names that have been assigned to them.

Select the requested number (1) and press the scroll wheel.

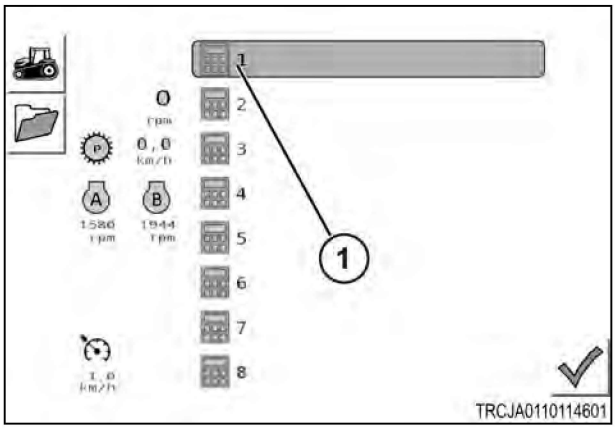

Fig. 79

4. Use the scroll wheel to highlight the memory name field (1). Push the scroll wheel button to select the field.

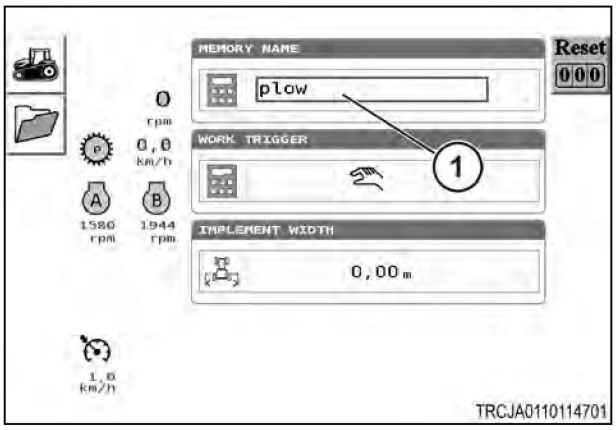

Fig. 80

5. Use this screen to select the required characters to name your implement. After each selection, press the scroll wheel button to confirm the selection.

The following options are on this screen:

- (1) Validate
- (2) Cancel
- (3) To delete a character
- (4) Space
- (5) To clear all the characters
- (6) Shift

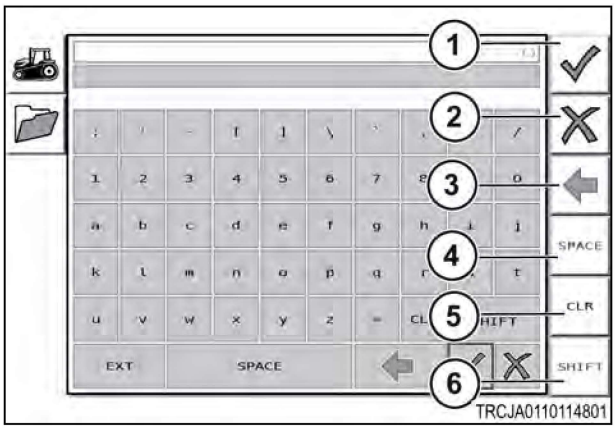

Fig. 81

6. Use the scroll wheel to highlight the work trigger field (1).

7. Push the scroll wheel button to select the trigger field. Scroll forward or rearward to select the appropriate work trigger icon.

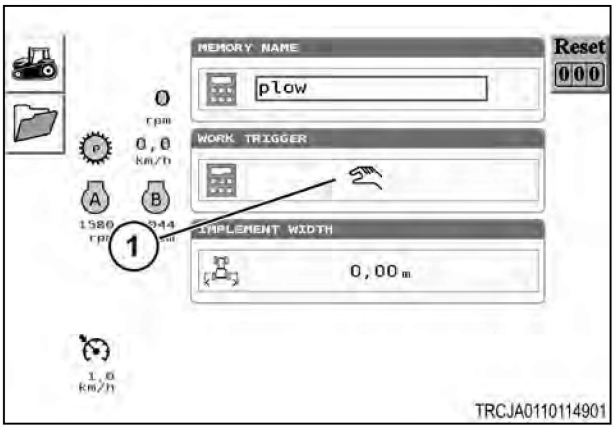

Fig. 82

8. Work trigger icons

Work trigger icons					
	Linkage in the lower position		PTO active	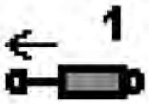	Positive flow rate spool valve 1
	Negative flow rate spool valve 1		Floating position spool valve 1	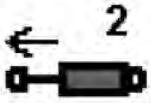	Positive flow rate spool valve 2
	Negative flow rate spool valve 2		Floating position spool valve 2		Manual control

9. Use the scroll wheel to highlight the implement width field (1). Select the option with the scroll wheel button. Select the implement width by scrolling forward or rearward. Press the scroll wheel button to set the implement width. The memory data can be reset to zero by selecting the reset option (2).

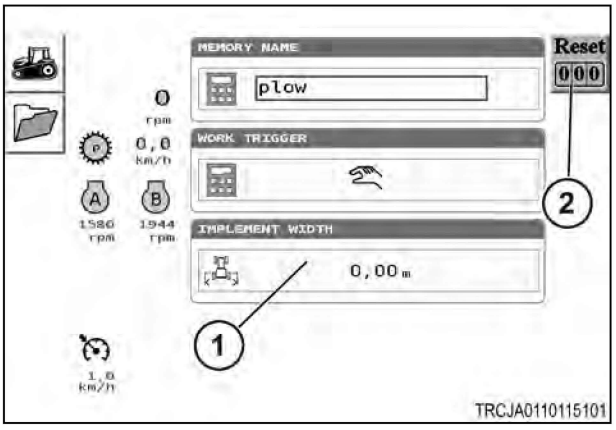

Fig. 83

10. To select any of the memory name applications, highlight the memory name. Press the hard key next to the checkmark (1) to validate.

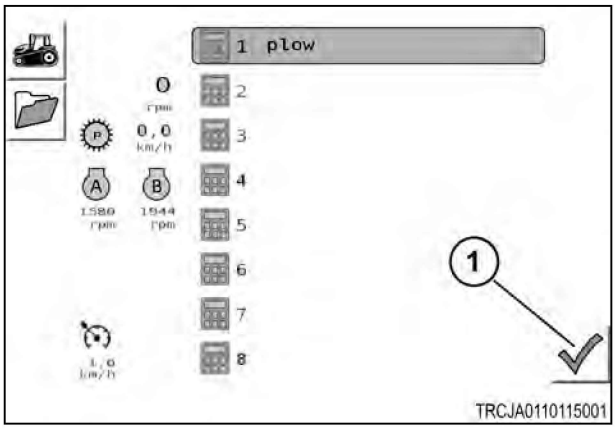

Fig. 84

3.16.19 Power management

Procedure

1. From the main menu, select a specific viewing screen by scrolling forward or rearward with the scroll wheel. Select the power management viewing screen (1) by pushing the scroll wheel button.

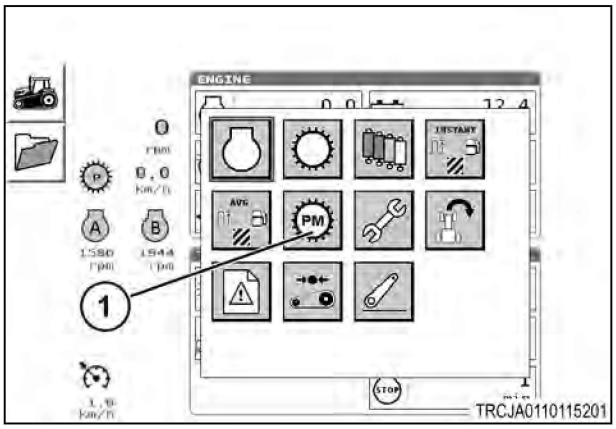

Fig. 85

2. After selecting the power management icon, the screen displays the following information:

- (1) Engine speed preset - engine A
- (2) Constant ground speed
- (3) Engine speed preset - engine B
- (4) Decelerator set speed

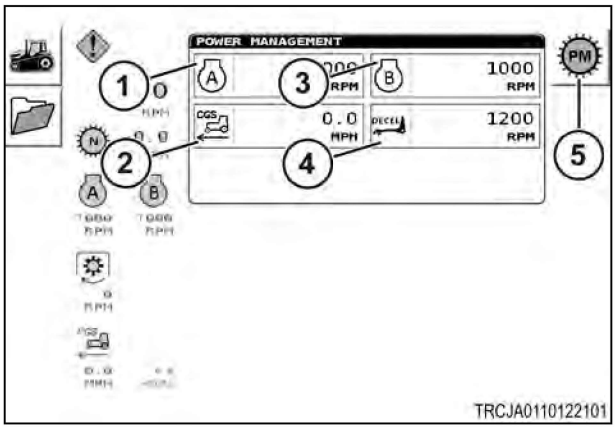

Fig. 86

3. The constant ground speed (CGS) will shift down at approximately 1600 rpm. The CGS will shift up at approximately 2000 rpm. The throttle must be set to full for the CGS to operate. This will automatically occur when engaging the CGS, but can be disabled if the operator uses the hand throttle. Continue to the next screen by pressing the hard key next to the icon (5).

4. To change the item selection (1), use the scroll wheel to highlight the selected box, and press the scroll wheel button. Use the scroll wheel to scroll up or down to select the information to change the engine speed A, then press the scroll wheel button. To change the constant ground speed (2) and the decel set point (3) use the scroll wheel to highlight the selected box, and press the scroll wheel button.

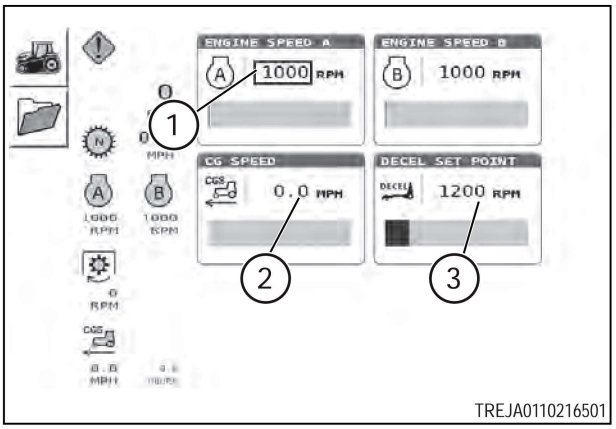

Fig. 87

3.16.20 Tractor settings

1. From the main menu, select a specific viewing screen by selecting forward or rearward with the scroll wheel. Select the highlighted icon (1), and then push the scroll wheel button.

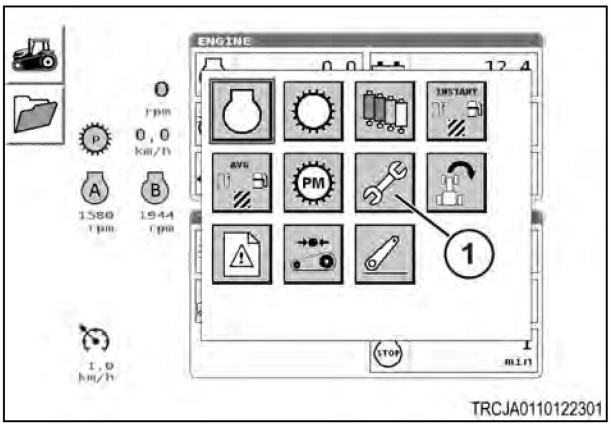

Fig. 88

2. After selecting the tractor setting icon , the current information displays:

- (1) Daytime backlighting
- (2) Implement width
- (3) Slip alarm
- (4) Nighttime backlighting
- (5) Lighting shutdown timer
- (6) Engine idle shutdown timer (not used)

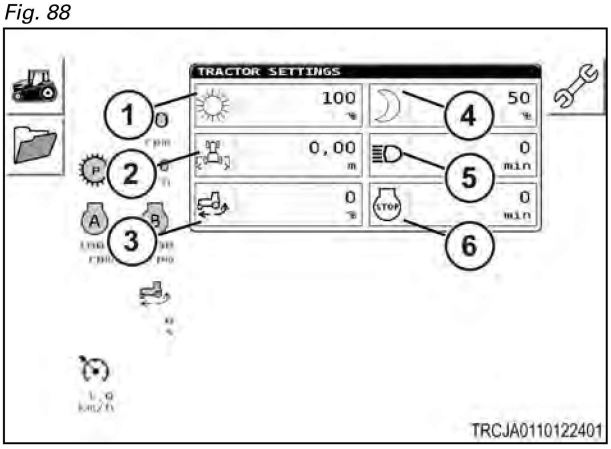

Fig. 89

3.16.21 Slip alarm

1. To change an item selection (1), use the scroll wheel to highlight the selected box, and then press the scroll wheel button. Use the scroll wheel to scroll up/down to select the information, and then press the scroll wheel button.

Continue to the next screen (2) by pressing the hard key adjacent to the icon and then pressing the scroll wheel button.

Press the hard key adjacent to the slip icon (3) to move to the slip calibration screen.

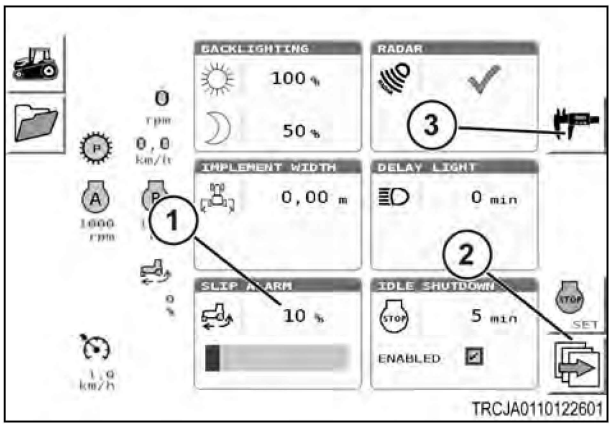

Fig. 90

2. Scroll and highlight the start button (1) for the slip calibration, and then press the scroll wheel button to start the calibration.

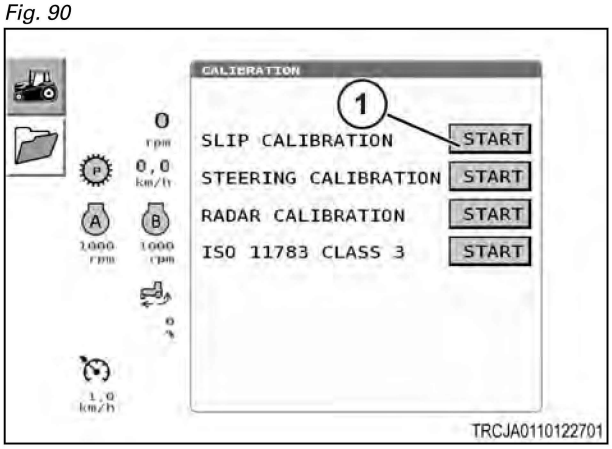

Fig. 91

3. Continue to the next screen (1) by pressing the hard key adjacent to the icon and pressing the scroll wheel button.

Setup slip calibration:

- Make sure there is no slip during calibration
- Set tractor speed to 8 kph (5 mph)

Press next and drive the tractor at a constant ground speed for four seconds.

Press CANCEL to abort.

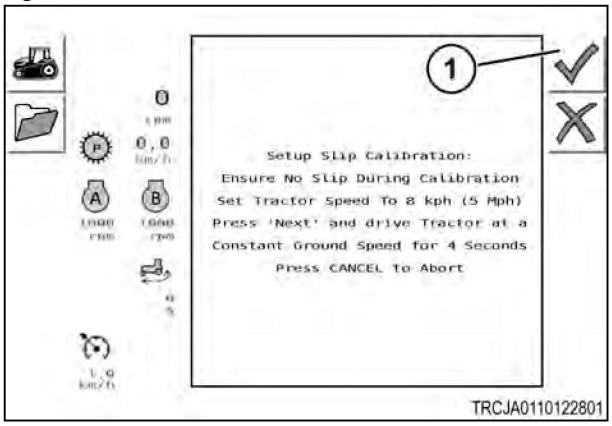

Fig. 92

4. Continue to the next screen (1) by pressing the hard key adjacent to the icon and pressing the scroll wheel button.

Calibration will complete when:

- Engine speed is above 1950 RPM
- Ground speed is above 16 km/h (10 mph)
- Hydraulic oil temperature is above 40 ° C (104 ° f)
- Steering wheel is centered

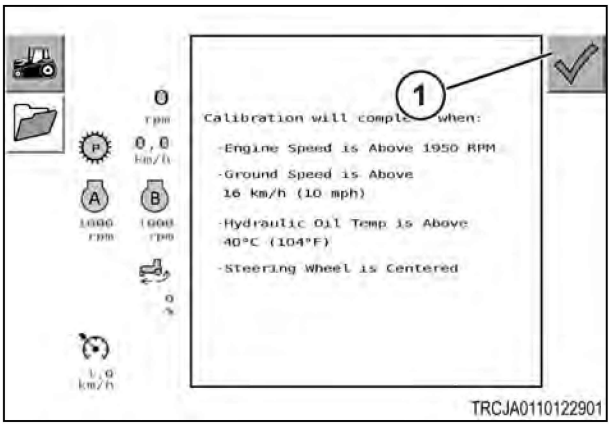

Fig. 93

5. The high slip warning alerts the operator when the slip has exceeded the alarm setpoint. The set point is set from 0 -100 percent.

The Slip alarm is seperate from the slip control.

The slip is calculated based on the ground speed versus the wheel speed.

Radar calibration is performed to offset the changes of worn tracks. Radar calibration directly changes the slip calibration and slip alarm.

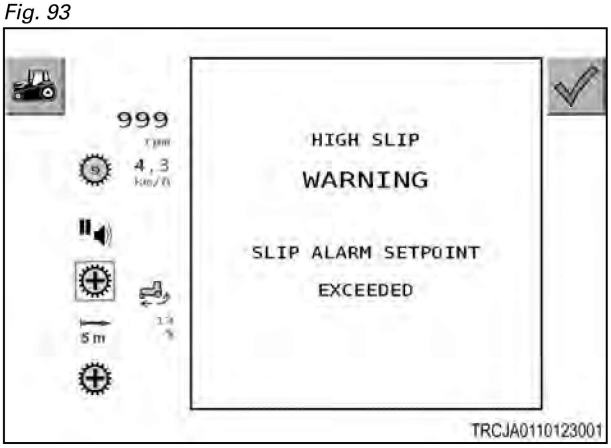

Fig. 94

3.16.22 ISO 11783 Class 3

1. Press the start button (1) to start the calibration process.

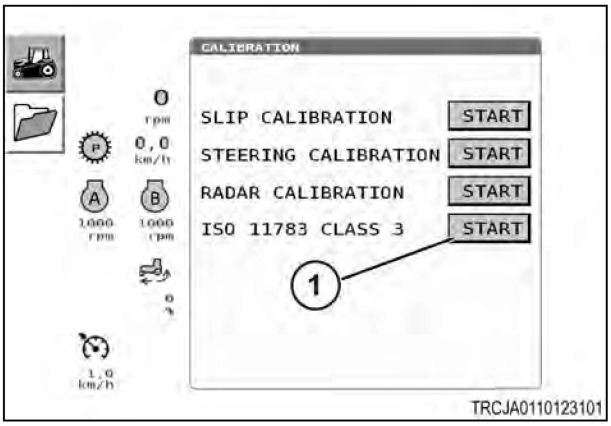

Fig. 95

2. To change item selections (1), use the scroll wheel to highlight the selected box, and then press the scroll wheel button. Use the scroll wheel to scroll up/down to select the information, and then press the scroll wheel button.

Continue to the next screen (2) by pressing the hard key adjacent to the icon.

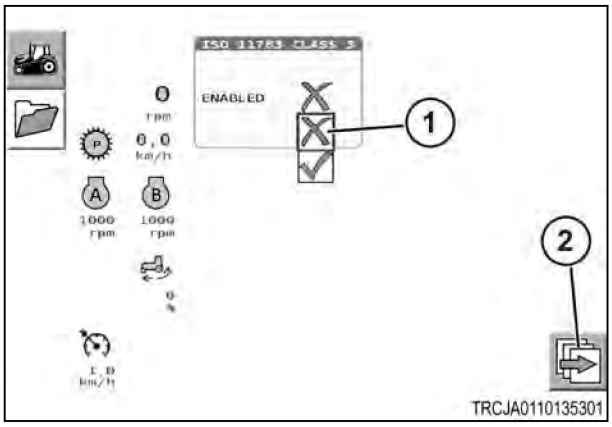

Fig. 96

3. Continue to the next screen (1) by pressing the hard key adjacent to the icon and pressing the scroll wheel button.

When the ISO 11783 Class 3 is enabled, the PTO, the hitch, and the implement valves can be controlled by the implement.

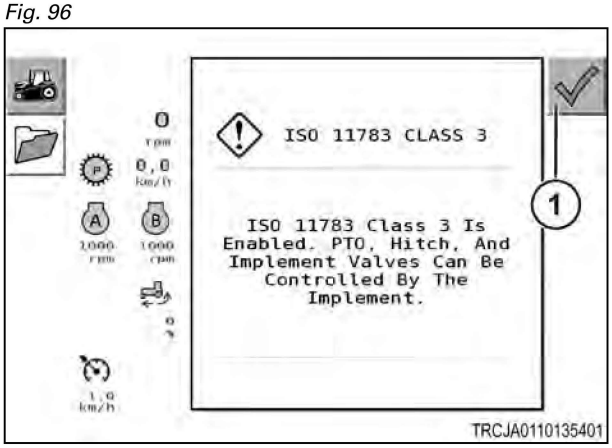

Fig. 97

3.16.23 Service intervals

Procedure

1. The home selection button on the terminal will take you back to the main menu screen. Use the scroll wheel to highlight and select the tractor icon (1) and then press the scroll wheel button.

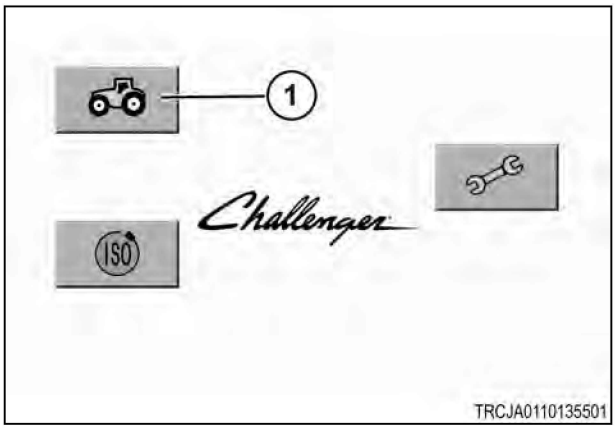

Fig. 98

2. The home screen may differ depending on what software is loaded.

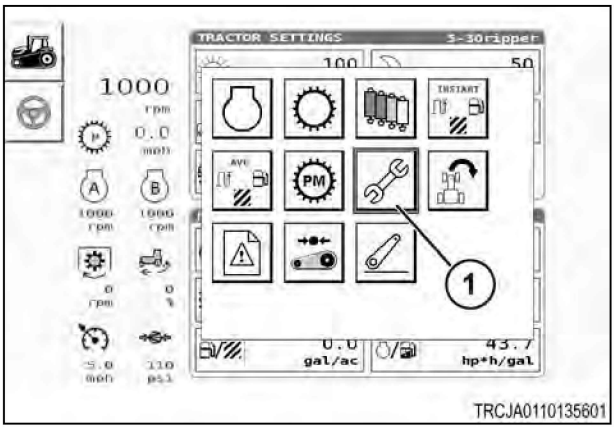

Fig. 99

3. Highlight the settings button (1) and then select by pressing the scroll wheel button.

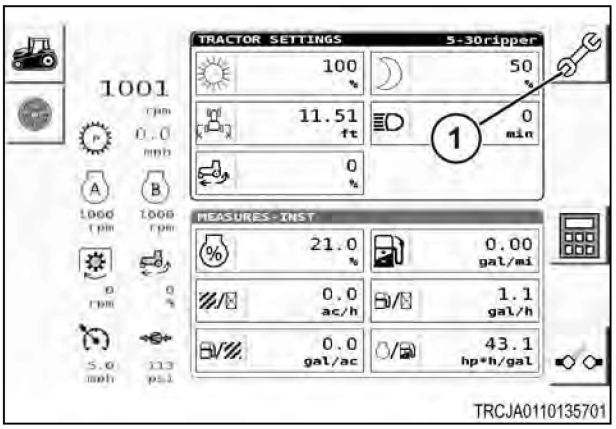

Fig. 100

4. Select the settings button (1) by pressing the hard key adjacent to the icon. The screen displays service hour intervals. To select hour intervals, press the hard key adjacent to the icon (1).

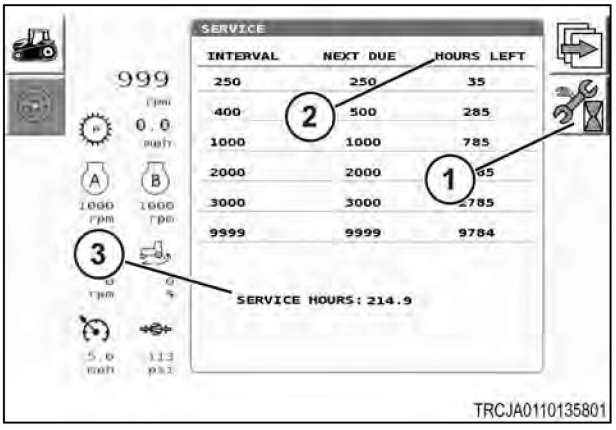

Fig. 101

Service intervals		
Interval hours	**Next due service hours**	**Hours left (2) shows hours left to next service intervals**
250	250	35
400	400	285
1000	1000	785
2000	2000	1785
3000	3000	2785
9999	9999	9784
(3) - Service hours: 214.9 (Shows engine hours)		

5. The screen shows the service intervals at 250 hours. To go to the next service hour interval, press the button adjacent to the icon (1). Use the reset button (2) to reset the memory data hours to zero after servicing scheduled items.

Service intervals		
Interval hours	**Next due service hours**	**Hours left**
250	250	35
Inspect battery		
Inspect front engine belts		
Obtain engine oil sample		
Obtain hydraulic oil sample		

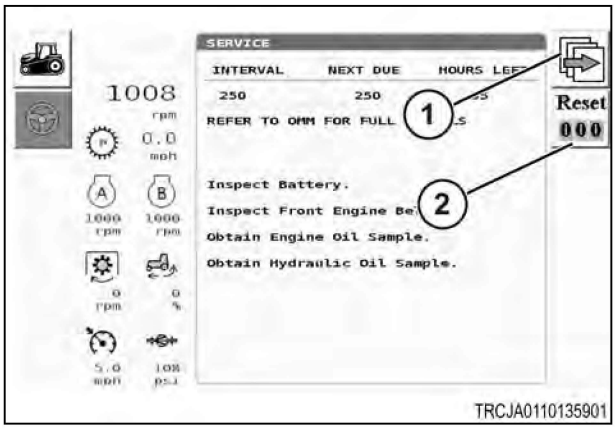

Fig. 102

6. The screen shows service intervals at 400 hours. To go to the next service hour interval, press the button adjacent to the icon (1). Use the reset button (2) to reset the memory data hours to zero after servicing scheduled items.

Service intervals		
Interval hours	**Next due service hours**	**Hours left**
400	400	285
Obtain coolant sample		
Change engine oil and filter		
Check engine valve lash		

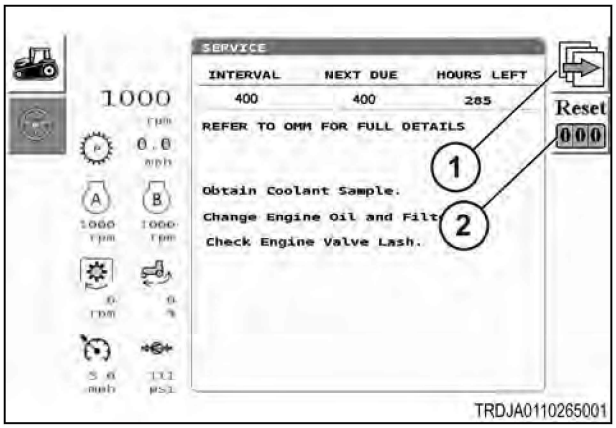

Fig. 103

7. The screen shows service intervals at 1000 hours. To go to the next service hour interval, press the button adjacent to the icon (1). Use the reset button (2) to reset the memory data hours to zero after servicing scheduled items.

Service intervals		
Interval hours	**Next due service hours**	**hours left**
1000	1000	785
Replace hydraulic system breather		
Clean hydraulic oil suction screen		
Inspect rollover protective structure		
Inspect seat belt		
Replace air filters		

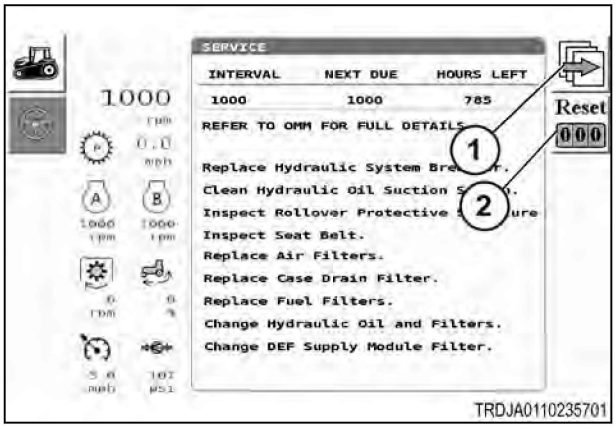

Fig. 104

Service intervals		
Interval hours	**Next due service hours**	**hours left**
Replace case drain filter		
Replace fuel filters		
Change hydraulic oil and filters		
Change DEF supply module filter		

8. The screen shows service intervals at 2000 hours. To go to the next service hour interval, press the button adjacent to the icon (1). Use the reset button (2) to reset the memory data hours to zero after servicing scheduled items.

Service intervals		
Interval hours	**Next due service hours**	**Hours left**
2000	2000	1785
Replace air dryer cartridge (if installed)		

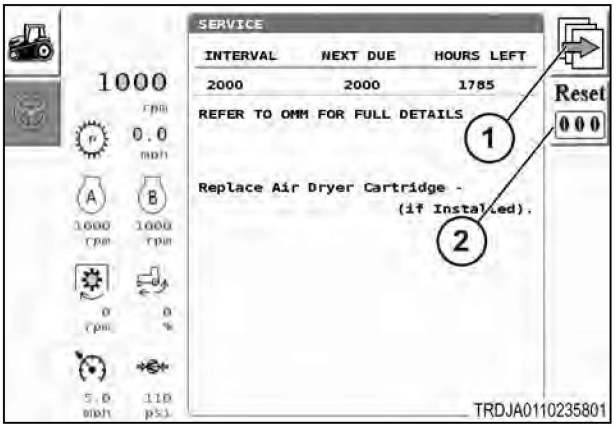

Fig. 105

9. The screen shows service intervals at 3000 hours. To go to the next service hour interval, press the button adjacent to the icon (1). Use the reset button (2) to reset the memory data hours to zero after servicing scheduled items.

Service intervals		
Interval hours	**Next due service hours**	**Hours left**
3000	3000	2785
Change coolant		
Inspect seat belt		

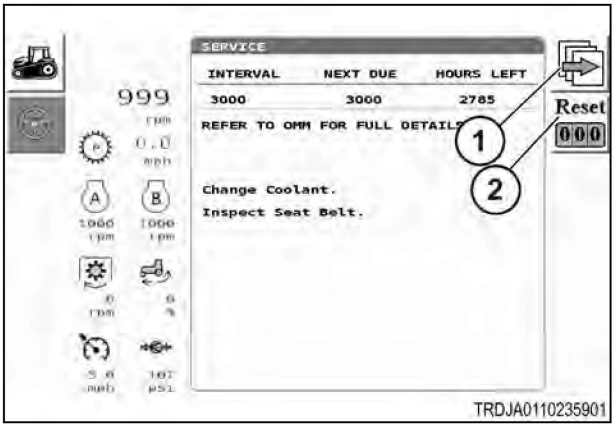

Fig. 106

10. The screen shows the service interval screens and what to service at the hours that the operator selects. To go to the next service hour interval by pressing the button adjacent to the icon (1). Use the reset button (2) to reset the memory data hours to zero after servicing scheduled items.

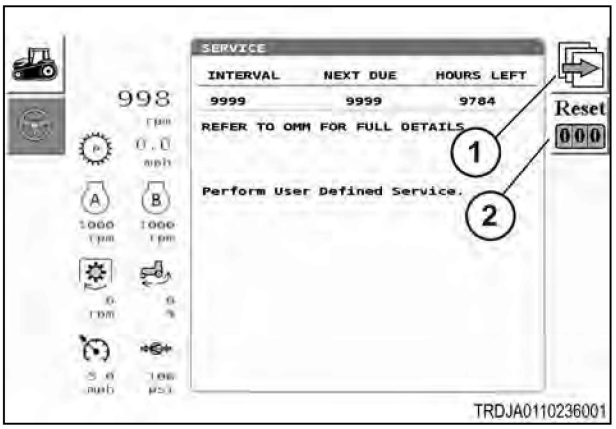

Fig. 107

11. To add or change hours for the user interval, highlight the hours and press the scroll wheel button. Scroll and select the hours and press the scroll wheel button to select the selection.

Return to the main menu viewing screens.

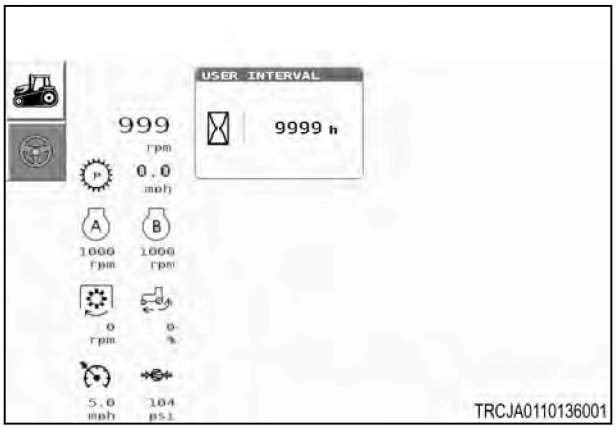

Fig. 108

3.16.24 Headland management

1. At the main menu, select the headland management screen (1). To select the icon, push the scroll wheel button.

The headland management lets the operator record operations that occur at the headland turn, and combine them so the operations can occur at one time by pressing a single button.

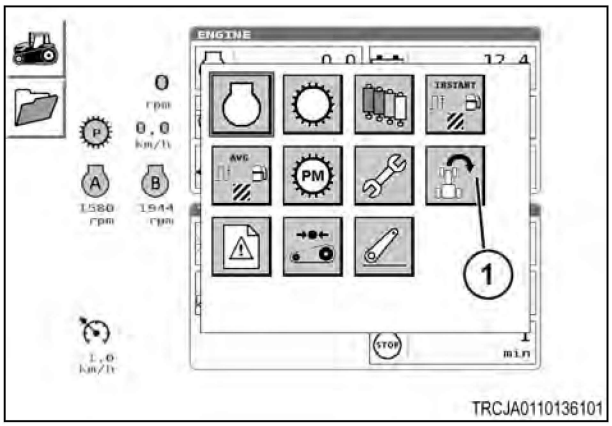

Fig. 109

2. Press the hard key adjacent to the icon(1) to continue to the machine sequence viewing screen.

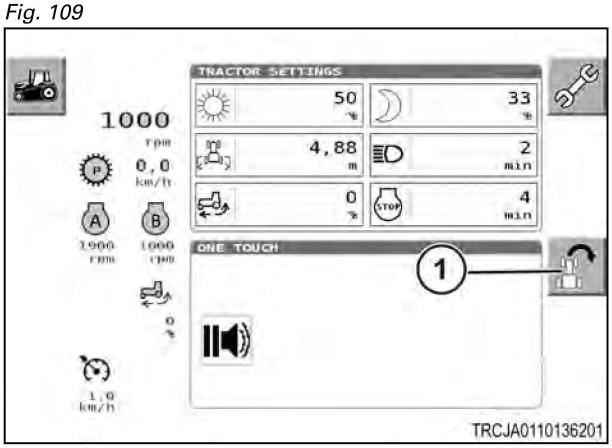

Fig. 110

3. The headland management sequence is recorded manually. To record a manual sequence, press the hard key (1). The operator can set a time delay by selecting the icon (2). The time interval between each step can be adjusted from 0.2 to 3 seconds.

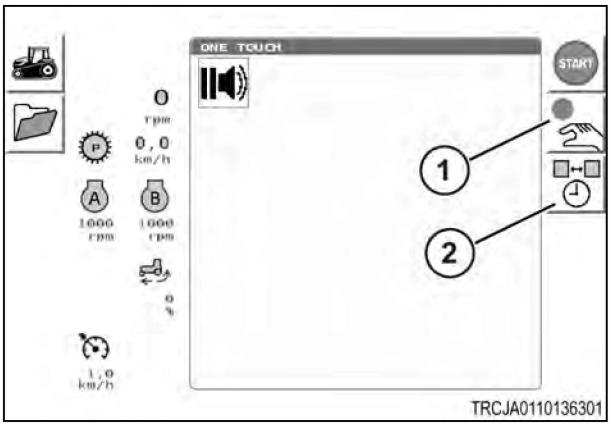

Fig. 111

4. In the headland management screen the operator can select the different operations in the sequence. Press the hard key (1) to insert a function block. Press the hard key (2) to erase a function block. Press the hard key (3) to complete editing the sequence.

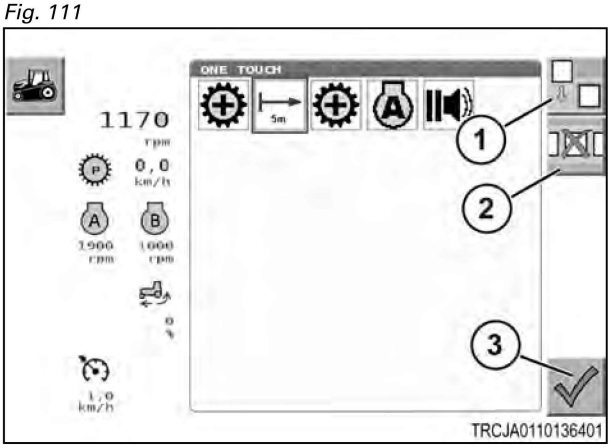

Fig. 112

5. Press the hard key (1) to start recording the selected sequence. The next function that will be played will highlight in red. Each time the machine is started, the headland management has to be started.

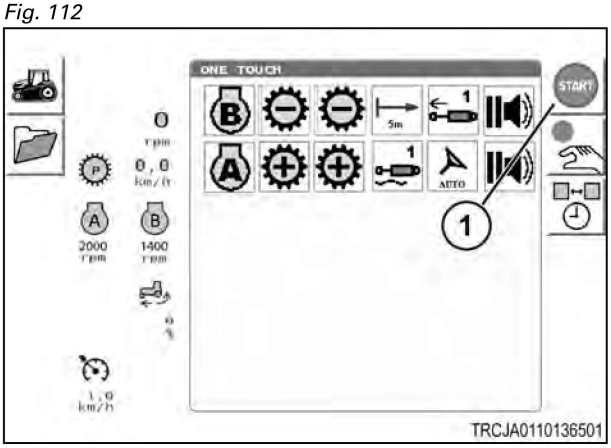

Fig. 113

6. Press the hard key(1) to stop the headland management. Press the hard key (2) to go back/forth to select the next function block that will occur next.

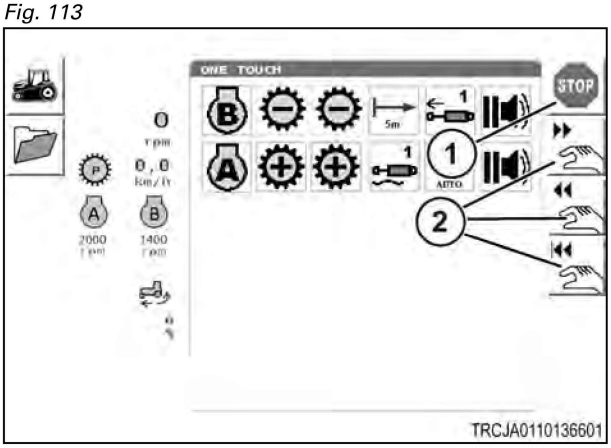

Fig. 114

7. Here is an example screen for a tillage implement. The entire sequence involves coming out of the field, turning, and re-entering the field:

1. Engine preset B
   - Downshift twice
   - Travel five meters before Aux valve 1 extends
   - Pause
2. Engine preset A
   - Upshift twice
   - Aux 1 valve float
   - Auto-guide engaged
   - Pause

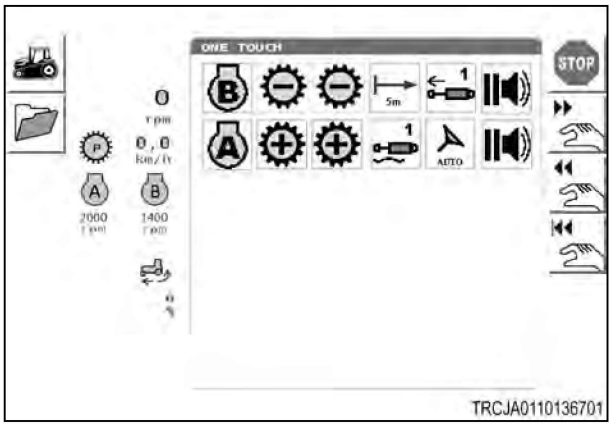

Fig. 115

After the pause, the sequence will repeat, starting with the engine preset B.

8. The operator can engage the headland management button (1) on the shift control lever.

- Pressing and holding the button for two seconds will operate the sequence until a pause is found. When reaching a pause, an alarm will beep.
- Pressing and releasing the button will forward the sequence one step at a time.

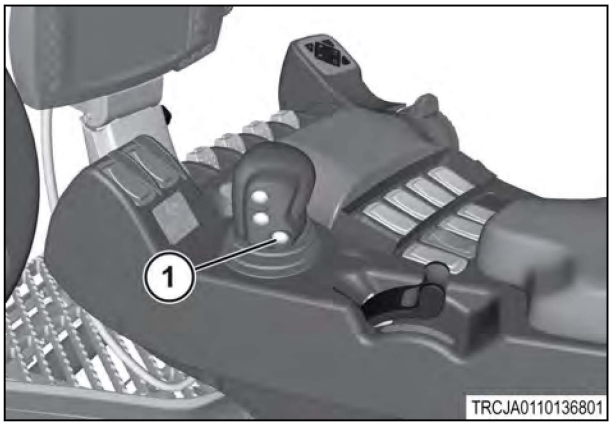

Fig. 116

3.16.25 Headland management icon identification

Headland management icon identification					
Distance pause 0.5 meter	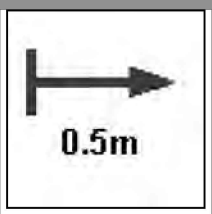	Distance pause 1 meter	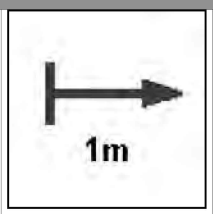	Distance pause 2 meters	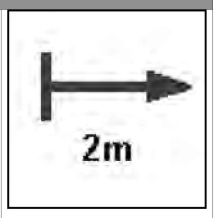
	Fig. 117		*Fig. 118*		*Fig. 119*
Distance pause 3 meters	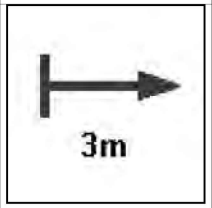	Distance pause 4 meters	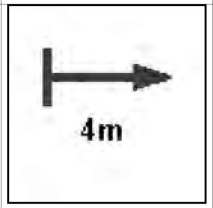	Distance pause 5 meters	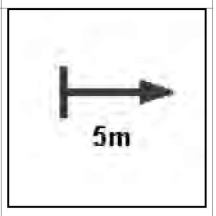
	Fig. 120		*Fig. 121*		*Fig. 122*
Shift up	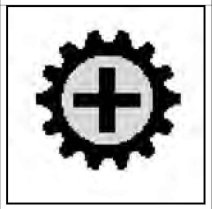	Power management maximum output		Power management constant ground speed	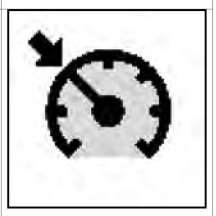
	Fig. 123		*Fig. 124*		*Fig. 125*
Auto-guide engage		Shut off all power management modes		Power management engine B	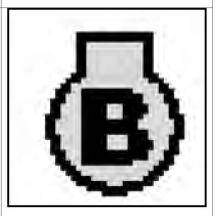
	Fig. 126		*Fig. 127*		*Fig. 128*
Power management engine A	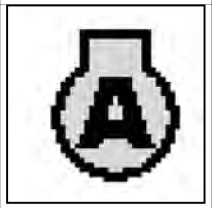	Aux valve 5 extend flow detent	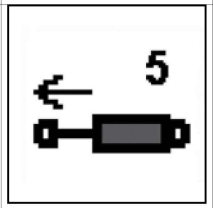	Aux valve 5 float	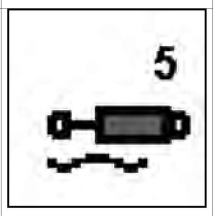
	Fig. 129		*Fig. 130*		*Fig. 131*
Aux valve 5 retract flow detent	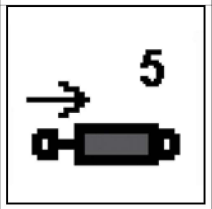	Aux valve 5 stop		Aux valve 4 stop	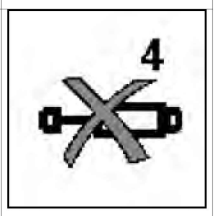
	Fig. 132		*Fig. 133*		*Fig. 134*
Aux valve 4 extend flow detent	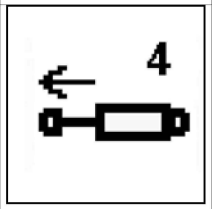	Aux valve 4 float	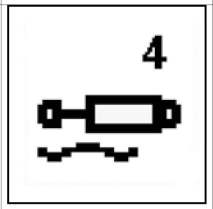	Aux valve 4 retract flow detent	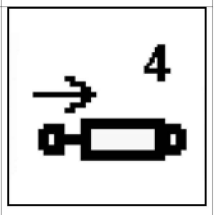
	Fig. 135		*Fig. 136*		*Fig. 137*

Headland management icon identification					
Aux valve 3 retract flow detent		Aux valve 3 float	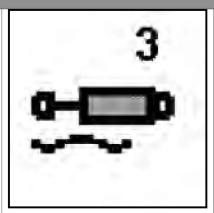	Aux valve 3 extend flow detent	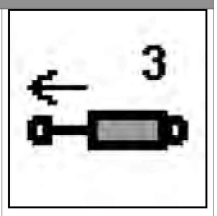
	Fig. 138		*Fig. 139*		*Fig. 140*
Aux valve 3 stop	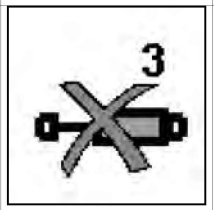	Aux valve 2 retract flow detent	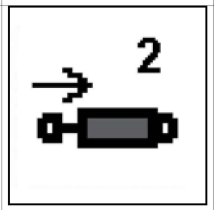	Aux valve 2 float	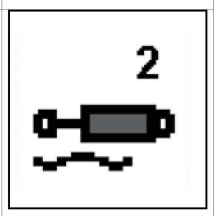
	Fig. 141		*Fig. 142*		*Fig. 143*
Aux valve 2 extend flow detent	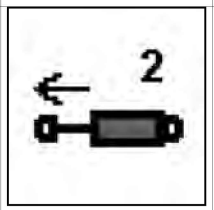	Aux valve 2 stop	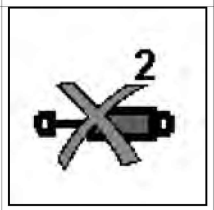	Aux valve 1 retract flow detent	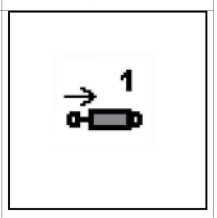
	Fig. 144		*Fig. 145*		*Fig. 146*
Aux valve 1 float	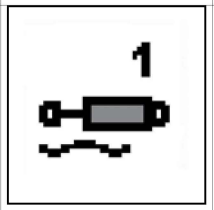	Aux valve 1 extend flow detent	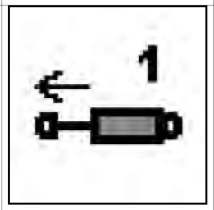	Aux valve 1 stop	
	Fig. 147		*Fig. 148*		*Fig. 149*
Shift down	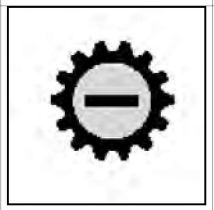	PTO start	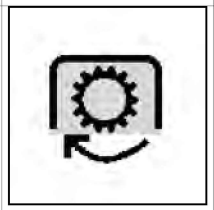	PTO stop	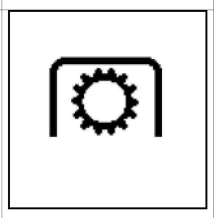
	Fig. 150		*Fig. 151*		*Fig. 152*

Headland management icon identification					
Pause beep	 Fig. 153	Timed pause one second timer	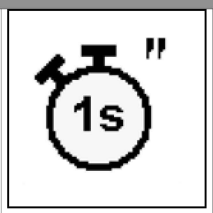 Fig. 154	Timed pause two second timer	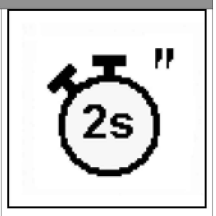 Fig. 155
Timed pause three second timer	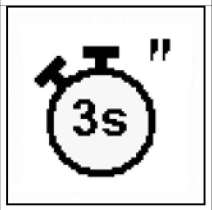 Fig. 156	Timed pause four second timer	 Fig. 157	Timed pause five second timer	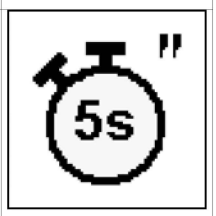 Fig. 158
Lower hitch rate	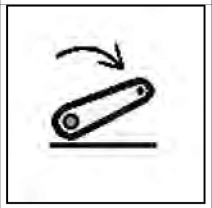 Fig. 159	Raise hitch rate	 Fig. 160		

3.16.26 DTC (diagnostic trouble codes) stored or active

1. From the main menu, select the DTC stored or active screen (1). Select the icon by using the scroll wheel button.

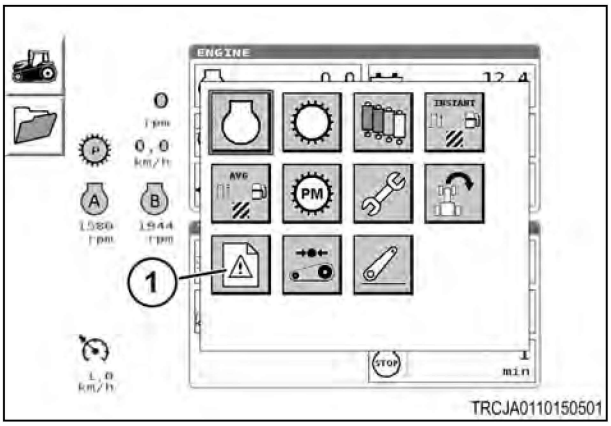

Fig. 161

2. The current screen shows the stored information. Continue to the active information screen by pressing the hard key next to the icon (1) and then pressing the scroll wheel button.

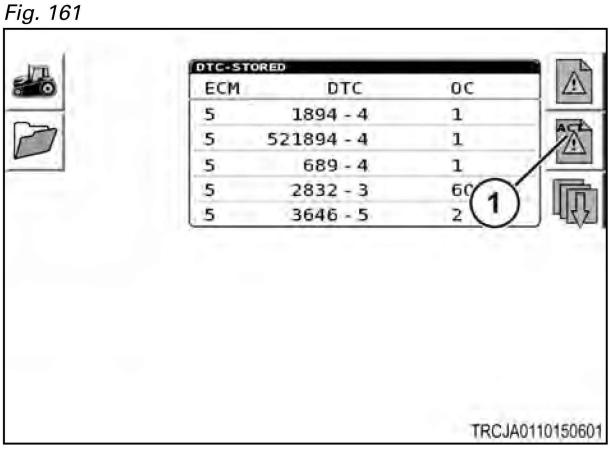

Fig. 162

3. The current screen shows the active information. For more additional pages, press the hard key next to the icon (1).

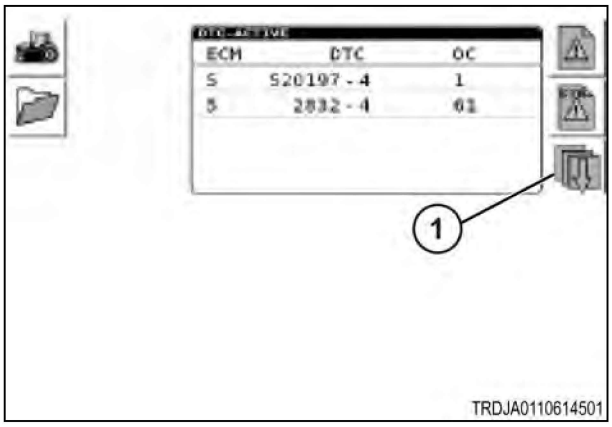

Fig. 163

3.16.27 3-point linkage

Procedure

1. At the main menu, select the hitch screen (1) by using the scroll wheel. Select the highlighted icon by pressing the scroll wheel button.

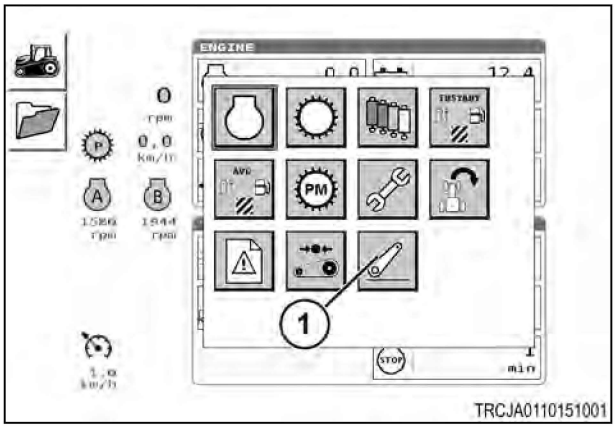

Fig. 164

2. The hitch screen displays the following information:

1	Raise hitch rate
2	Hitch position
3	Lower hitch rate
4	Slip sensitivity
5	Draft control
6	Steer position

Continue to the next screen (7) by pressing the scroll wheel button.

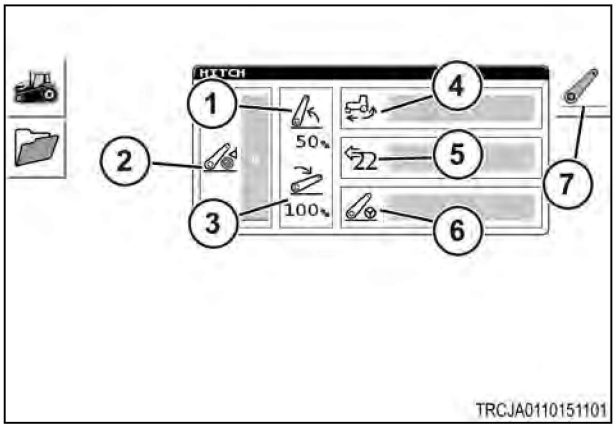

Fig. 165

3. To change item selections, scroll to the highlighted box (1) and then press the scroll wheel button. The raise limit will limit the maximum height for the 3-point linkage. Use the raise limit to prevent the large implements from hitting the rear of the cab.

The raise rate (2) changes the speed of raising the 3-point linkage.

NOTE:
If the raise rate is too fast, the 3-point linkage can surpass the setting for the raise limit. This can be prevented by adjusting the raise rate to a slower speed.

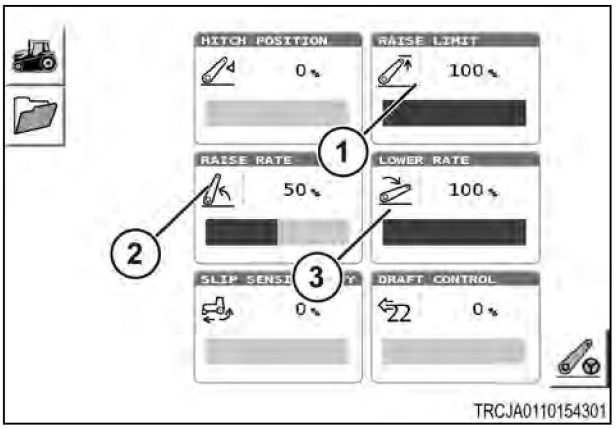

Fig. 166

The lower rate (3) varies the speed of lowering the 3-point linkage.

The slip sensitivity adjusts the response of the hitch during dangerous conditions.

This function lets the operator adjust the amount of response from the 3-point linkage in relation to the track slippage. When the track slippage is more than the maximum setting, the 3-point linkage raises until the track slippage falls below the maximum setting. When the track slippage is reduced, the 3-point linkage returns to the initial depth set by the 3-point linkage control lever.

The operator can adjust the value of the slip sensitivity from zero to 100 percent. As the operator increases the value, the hitch responds to track slippage in a shorter amount of time to raise the hitch.

The slip sensitivity operates when:

- The setting for slip sensitivity is more than zero
- The 3-point linkage is captured
- The ground speed is more than 4.8 km/h (3 mph)
- The inching clutch control is not engaged

A ground speed sensor is used for the true ground speed. The ground speed sensor receives a good signal from the ground conditions.

NOTE:
When operating the machine over water or snow, the radar unit cannot operate correctly. If the slip sensitivity is on, the 3-point linkage can raise. Set the slip sensitivity to zero until the machine is on solid ground.

NOTE:
The slip sensitivity stops when the 3-point linkage is raised with the raise/lower switch. The slip sensitivity engages when the 3-point linkage is lowered and a measurable draft load is caused.

4. Draft control (1) results by raising the 3-point linkage if the engine speed falls below a minimum engine speed.

The draft control operates when:

- The 3-point linkage is captured
- Calibration mode is not selected
- The necessary engine speed is more than 1400 RPM
- The setting for the draft control is more than zero
- Power management mode set to engine A or B
- The machine is moving in a forward gear

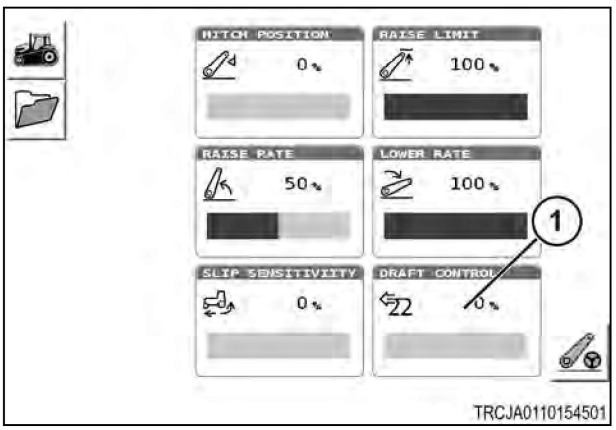

Fig. 167

- The inching clutch control not engaged

The hydraulic system will respond to changes in the draft load with large movements of the implement.

The rate of linkage movement will also decrease.

Set the draft control to zero. In this state, the hitch is in the position control mode.

Monitor the implement while pulling the implement through the ground. If the reaction from the hydraulic system is too great, then reduce the sensitivity. To reduce the sensitivity, adjust the sensitivity down a few degrees. Continue this procedure until the amount of implement movement is correct.

5. The **HITCH POSITION** (1) shows the vertical position of the 3-point linkage in relation to the RAISE LIMIT setting.

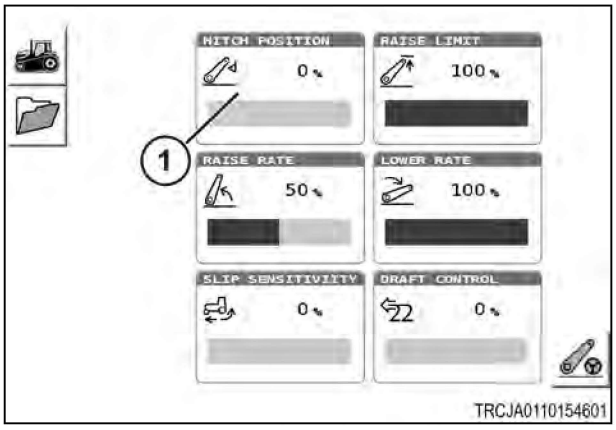

Fig. 168

3.16.28 Slip calibration

1. Use the scroll wheel (1) to highlight the tractor icon (2). Press the scroll wheel button to select the icon.



Fig. 169

2. Press the hard key (1) to select the configuration menu.

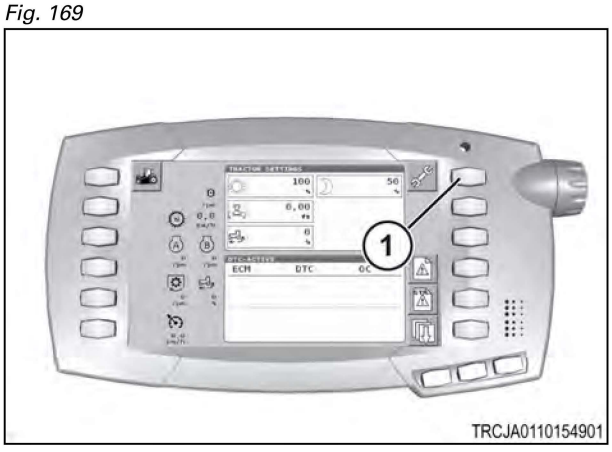

Fig. 170

3. Press the hard key (1) to select calibration menu,

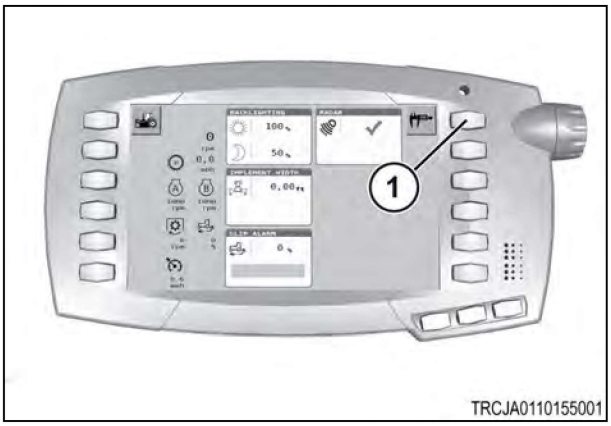

Fig. 171

4. Use the scroll wheel to highlight the slip calibration start button (1). Press the scroll wheel button to select the selection.

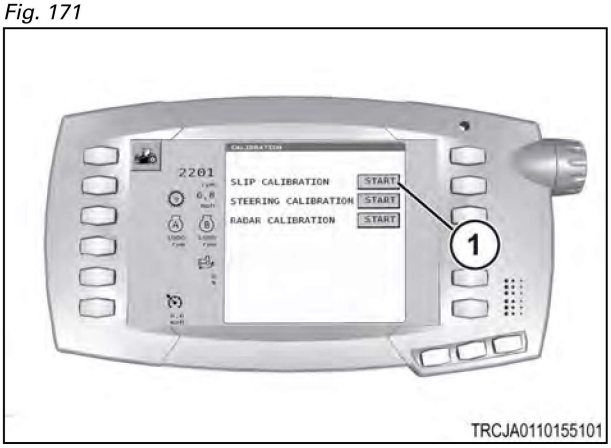

Fig. 172

5. The slip calibration shows:

- During the calibration make sure there is no tire to ground slipping.
- Set the tractor speed to a forward speed of 8kph (5 mph)
- Press the hard key next to the checkmark icon (1) to accept the setting and start the calibration.
- Drive tractor at a constant ground speed for four seconds.
- If calibration needs to be aborted press the hard key next to the X (2).

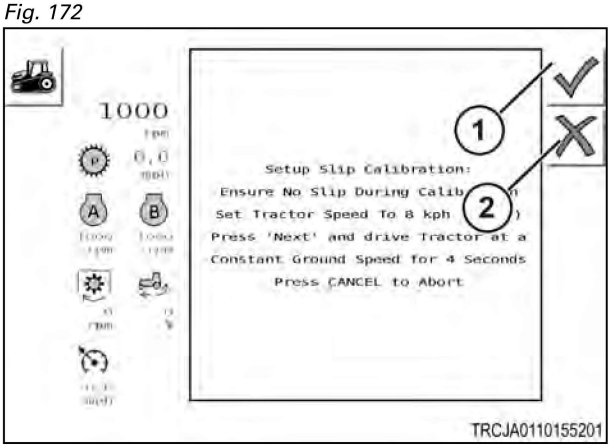

Fig. 173

6. When the calibration begins, the following message "slip calibration in progress" shows on the screen. After four seconds pass, press the hard key next to the checkmark (1).



Fig. 174

7. When the slip calibration is complete, the following message "slip calibration successful" shows on the screen.



Fig. 175

3.16.29 Inching pedal calibration

Procedure

1. Use the scroll wheel to highlight and select the tractor icon (1), and then press the scroll wheel button.

2. The inching pedal calibration can be started by this screen by having power to the cab on.



Fig. 176

3. To calibrate the inching pedal, press the inching pedal down and then hold for approximately three to five seconds. Slowly release the pedal slowly. Wait three seconds to repeat the procedure. Repeat this process for a total of three times.

When the calibration is complete a message will show that the process is complete.

NOTE: *Correct timing with this procedure is very important. If the calibration is not correct, change the inching pedal holding time.*

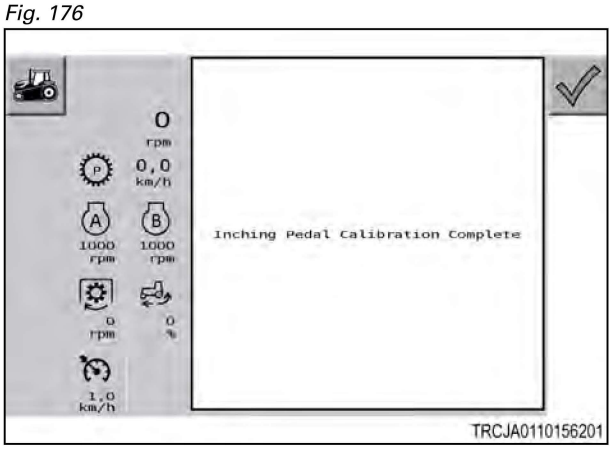

Fig. 177

3.16.30 Radar calibration

1. Use an accurate measuring device to measure off a distance of 122m (400 ft). That is the distance the operator needs to go to correctly calibrate the radar.

Use the scroll wheel (1) to highlight the machine icon (2). Press the center button to select the selection.



Fig. 178

2. Press the hard key (1) to select the configuration menu.

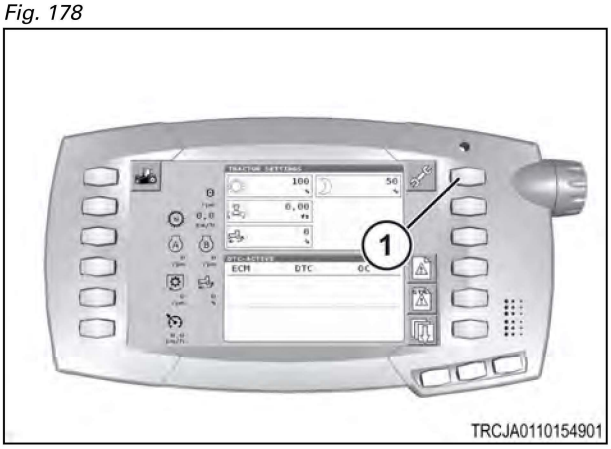

Fig. 179

3. Press the hard key (1) to select the calibration menu.

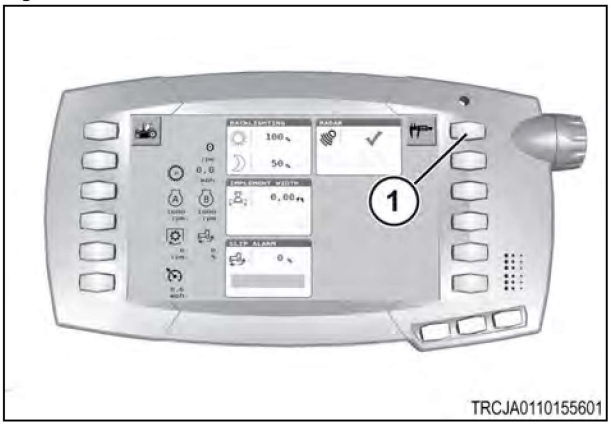

Fig. 180

4. Use the scroll wheel to highlight the radar calibration start button (1). Press the scroll wheel button to select the selection.

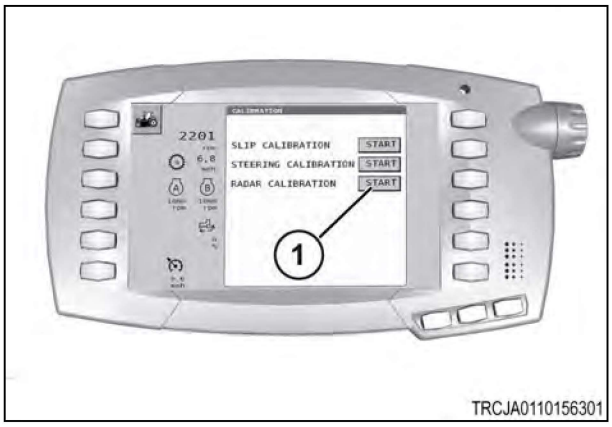

Fig. 181

5. After marking the distance and the machine is at the start point, press the hard key next to the checkmark (1) to start the calibration.

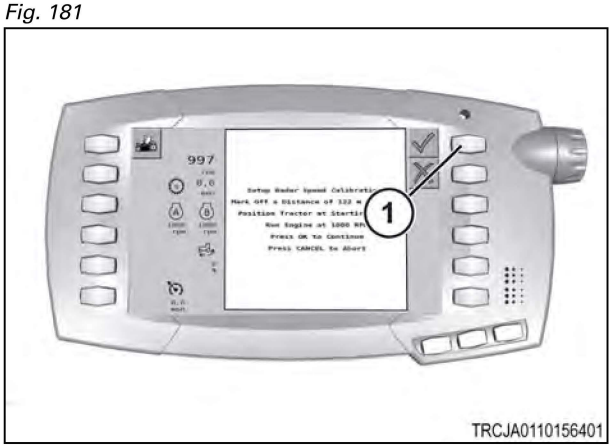

Fig. 182

6. Follow the on-screen commands during the calibration process. At the end point, press the hard key next to the checkmark (1).

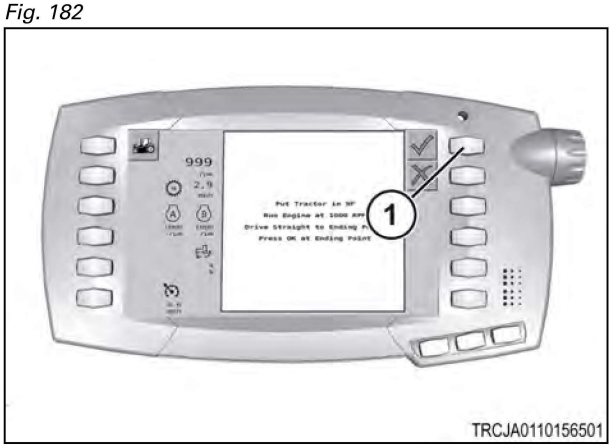

Fig. 183

7. The machine radar is calibrated.

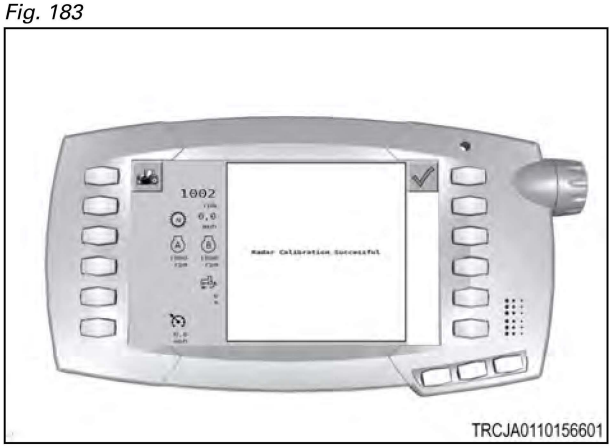

Fig. 184

3.16.31 Enabling the video camera - software version 3.2 and before

Procedure

1. Install the remote video camera.
2. Connect the cable to the terminal.
3. Select the icons in this sequence:



4. Select the box next to **Video** (1).
5. Put a checkmark in the box (2).
6. Select .

   Result

   The  will show on the left side of the screen.
7. Select .

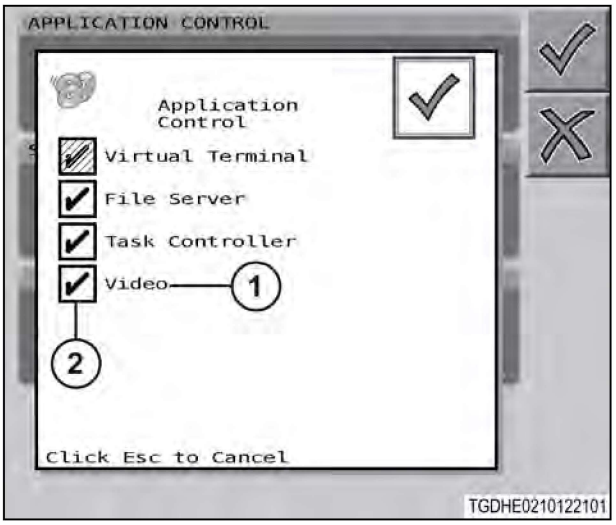

Fig. 185

8. From the video camera screen, adjust the view, as necessary.

   The selected function (1) and the adjustment (2) show on the bottom of the screen.

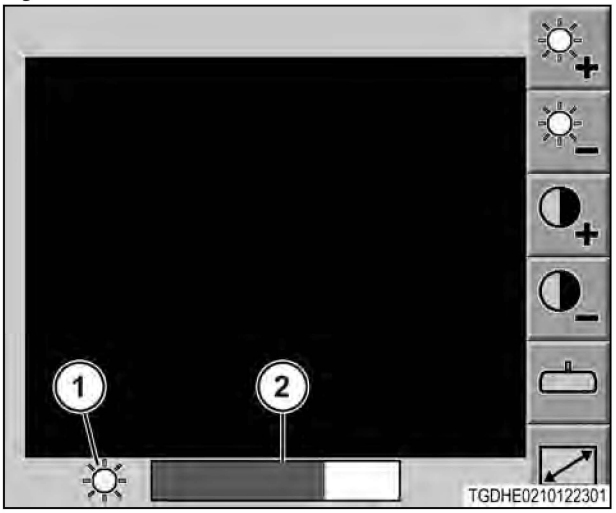

Fig. 186

	Increase brightness
	Decrease brightness
	Increase contrast
	Decrease contrast
	Flip View
	Full screen - for C1000 terminals
	Change between the cameras - C2100 terminal

9. Select the icon on the left side of the screen to go to the application main screen.

3.17 Air system operation

3.17.1 Air system operation

The air system is optional.

The compressor is water-cooled and oil lubricated. The air is pulled into the compressor from the engine air intake and pushed out to the air dryer. The compressor moves 360 cc/rev (22in³/rev) of air.

An air coupler for the use with air tools is mounted to the right-hand side frame rail toward the front of the machine. The line from the air coupler is connected to the main air tank.

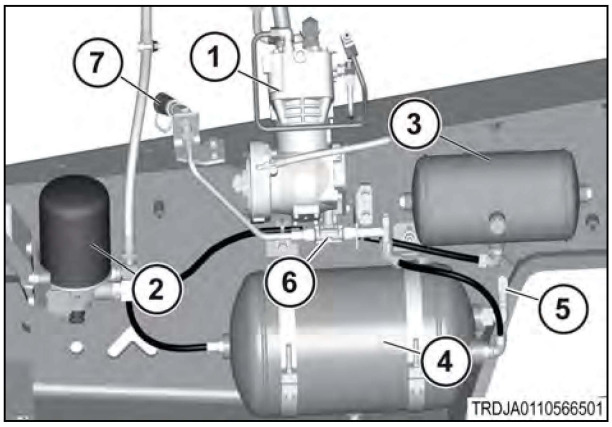

Fig. 187

Air system component location	
1	Air compressor
2	Air dryer
3	Regeneration tank
4	Main tank
5	Air pressure sensor
6	Check valve
7	Air coupler

3.17.2 Air hose connection

WARNING: *To prevent personal injury, always wear the eye and face protection when using pressurized air.*

On the right front frame rail is the coupler for connecting the air hose. This coupler is available on machines with an air compressor and an air tank. Use this coupler for light-duty use only.

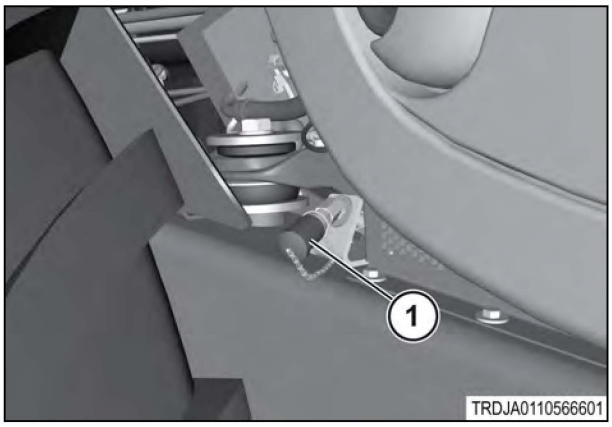

Fig. 188

3.18 Machine control

3.18.1 Throttle control

Use the throttle control lever (1) to control the engine speed. Push the throttle forward to increase and to decrease the engine speed push the throttle rearward.



Fig. 189

3.18.2 Decelerator - if equipped

Push down on the pedal (1) to override throttle control lever. The decelerator decelerates the engine until the set point is reached. When releasing the pedal, the engine speed returns to the setting of the throttle control lever. The operator can use the decelerator pedal to even out the deceleration of the engine. The engine deceleration is proportional to the range of travel of the decelerator pedal.

The operator can adjust the set point for decelerator. The set point for decelerator has a minimum of 1200 rpm to a maximum of 2300 rpm.

NOTE:
Do not use the decelerator while roading the machine. The roading lockout switch is to disable the decelerator while roading the machine.

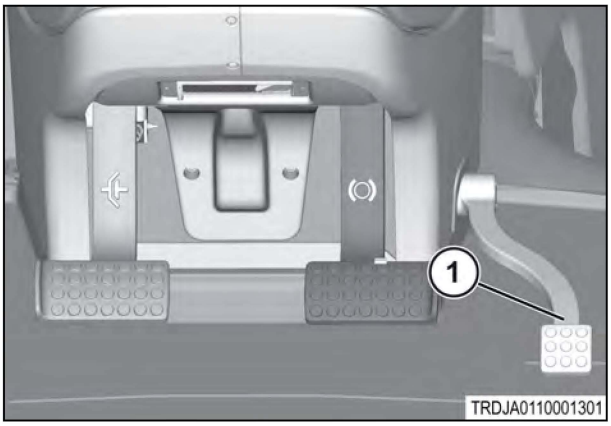

Fig. 190

3.18.3 Power management

Power management system lets the machine automatically shift the transmission and/or change the engine throttle under certain circumstances. The power management button has two options, the maximum output and constant ground speed.

The maximum output mode (1) will let the machine automatically downshift into a lower gear if the engine starts to lug down under load and the rpm falls below the power band. Once the draft load decreases and the engine's rpm recovers, the transmission will up shift back to the original gear to maximize productivity.

The constant ground speed mode (2) lets the operator set a ground speed that will remain constant. When engaged, the control system will



Fig. 191

select an engine speed and gear ratio to achieve the desired speed.

Power management system lets the operator customize the machine operation for maximum productivity and efficiency.

3.18.4 Differential lock - if equipped

In poor traction conditions use the differential lock to increase productivity. Using the differential lock will reduce the amount of wear in the axle differential especially while pull-loading scraper pans with special application machines.

Engage the differential lock switch (1) before starting to load the scraper pan. Load the pan in a relatively straight pull for best results. Disengaged the differential lock once the pans are loaded and out of the ground.

The operator can select to set up the One-Touch feature on the machine to engaged or disengage the differential lock.

The differential lock can be engaged by:

1 Differential lock
2 One-Touch switch

The differential lock can be disengaged by:

1 Differential lock
2 One-Touch switch
3 Brake pedal
4 Decelerator pedal

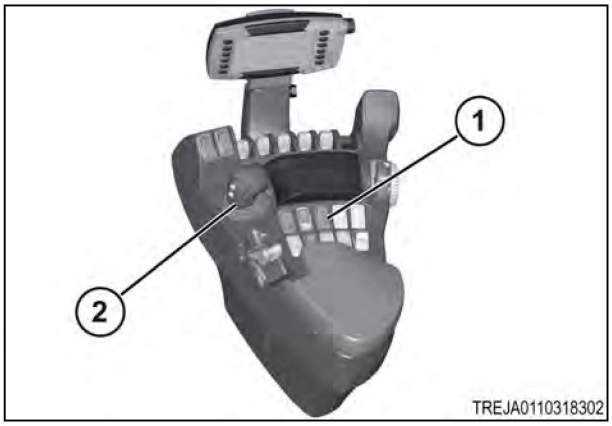

Fig. 192

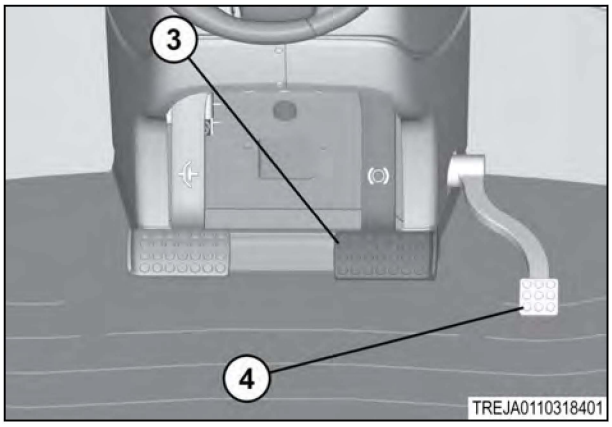

Fig. 193

3.18.5 Transmission control

IMPORTANT:
If total machine weight is more than 27 213 kg (60 000 lb), keep operation at full power, drawbar loads at ground speeds below 6.4 km/h (4 mph), will reduce power train life.

Transmission has the following standard features:

- Sixteen forward gears
- Four reverse gears
- Programmable electronic controls

For shifting gears, the following three methods:

- Sequential shifts
- Shuttle shifting
- Speed matching

NOTE: *If the machine is operating under heavy load and a five to four down shift is commanded, the transmission will automatically down shift to three forward to make the powertrain life better.*

3.18.6 Machine ground speeds

NOTE: *Machine ground speeds at 2100 engine rpm.*

Gear	Forward speed	Reverse speed
1	2.65 km/h	2.12 km/h
2	3.36 km/h	5.15 km/h
3	4.26 km/h	5.80 km/h
4	5.41 km/h	14.09 km/h
5	6.44 km/h	-
6	7.25 km/h	-
7	8.17 km/h	-
8	9.20 km/h	-
9	10.34 km/h	-
10	11.65 km/h	-
11	13.14 km/h	-
12	14.79 km/h	-
13	17.61 km/h	-
14	22.36 km/h	-
15	28.30 km/h	-
16@ 2100 rpm	35.94 km/h	-
16@ 2300 rpm	39.4 km/h	-

3.18.7 Transmission control lever

The transmission control lever (1) has a lock button (2). Lift the button to shift in and out of park. Lift the lock button to permit movement between park and neutral, from neutral to forward, or from neutral to reverse.

Move the lever in a forward direction for forward or rearward for reverse travel. Use the transmission control lever to quickly make gear changes. Press the button (3) to select a higher gear or the button (4) to select a lower gear. Pressing and holding the buttons supplies a rapid advance through the gears.

Shift the transmission in a sequence by using the following three methods:

- Preselect a gear before moving machine.
- Use power shift to change gears while machine is in motion.
- Use one-touch switch(5)

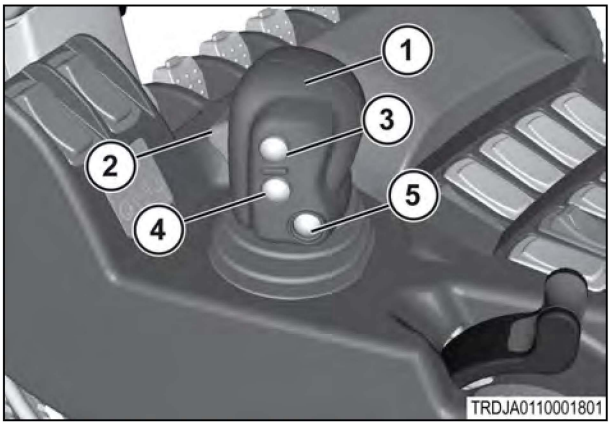

Fig. 194

3.18.8 Transmission shifting diagram

The machine has great lugging capacity. The peak engine horsepower output occurs when engine speed is approximately 1800 rpm. Peak torque output of the machine occurs at approximately 1500 rpm. To prevent early transmission clutch wear, it is important to keep engine speed above 1500 rpm when shifting under heavy load.

To better the life of the transmission components, keep the engine speed above 1500 rpm. If the engine speed is lugged below 1500 rpm, the operator must not shift to a lower gear but must decrease the load on the engine/transmission. Let the engine speed increase above 1500 rpm before shifting.

To prevent lugging the engine speed below 1500 rpm, use the power management - Max Output Mode. Power management will automatically shift the tractor to keep maximum power output, approximately 1800 rpm.

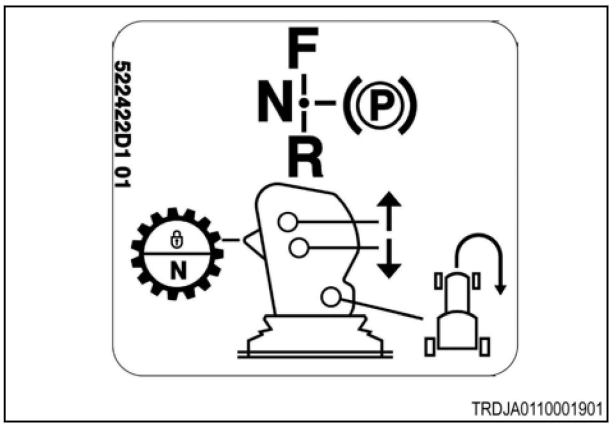

Fig. 195

3.18.9 Preselecting a gear before moving

NOTE: *The transmission automatically defaults to F7 and 1R when the engine start switch key is in the run position. The transmission control lever when placed in the reverse position, will display the reverse gear. Tenth gear is the highest gear for starting the forward movement from a stop position.*

Use the following procedure to preselect a gear different from the default gears.

1. Start the engine with the transmission control lever in the park position.
2. Move the transmission control lever to the neutral position.
3. Use the upshift (1) and the downshift (2) buttons to select the desired gear.
4. **NOTE:** *When changing the default forward gear, the default reverse gear is changing the same amount.*

   Select the gear desired, and lift the neutral lock button while moving the control lever fully forward to engage forward travel.

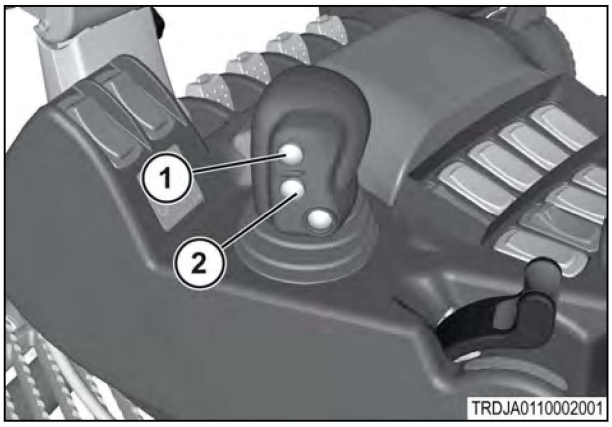

Fig. 196

3.18.10 Using of the inching clutch control

To modulate the clutch use the Inching clutch control. Fully push the inching clutch control before moving the transmission control lever in the forward or the reverse direction.

Slowly release the pedal to start the movement of the tractor.

3.18.11 Operating the shuttle shift

The shuttle shift is used to quickly change direction of travel without using the inching clutch control.

IMPORTANT: *When towing a heavy load at high speeds, do not operate the shuttle shift. Shifting under these conditions can cause excessive transmission clutch wear, Stop the machine before changing direction by using the inching pedal and the service brakes.*

WARNING: *Do not move the control lever to neutral when moving at high speeds. Moving the control lever to neutral can allow the transmission to speed match and it may not be possible to reselect original gear, particularly if traveling down a steep grade. This will cause loss of control and could result in an accident and personal injury.*

To change the direction of travel, lift the lock button (1). Move the transmission control lever fully in the opposite direction.

Shuttle shifting can be done at any engine speed. Also, any gear can be selected.

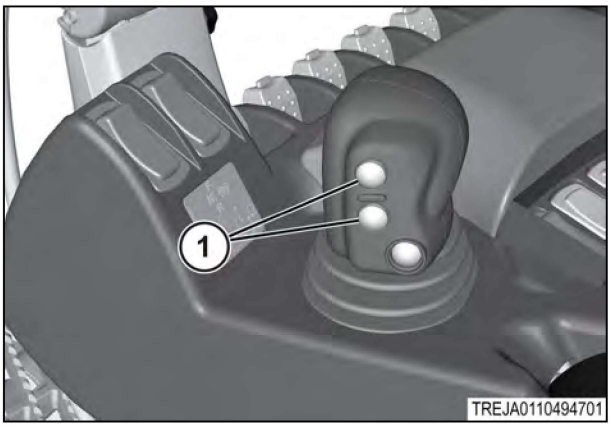

Fig. 197

The shuttle shift is used to quickly change direction of travel without using the inching clutch control.

IMPORTANT: *When towing a heavy load at high speeds, do not operate the shuttle shift. Shifting under these conditions can cause excessive transmission clutch wear, Stop the machine before changing direction by using the inching pedal and the service brakes.*

WARNING: *Do not move the control lever to neutral when moving at high speeds. Moving the control lever to neutral can allow the transmission to speed match and it may not be possible to reselect original gear, particularly if traveling down a steep grade. This will cause loss of control and could result in an accident and personal injury.*

3.18.12 Speed matching

When roading in gears above 12 forward, the transmission can automatically select a ratio to match engine speed to road speed.

Speed matching can be used if pulling a heavy trailer.

To do a speed matching for an upshift, the machine must be moving in 12 forward or above. Press the inching clutch control (1) while quickly decreasing the engine speed (2).

To do speed matching for a downshift, decrease the engine speed to approximately 1000 rpm to 1200 rpm. Press the inching clutch control, while quickly increasing the engine speed to full throttle.

Speed matching is only possible if operating above the selected default gear.

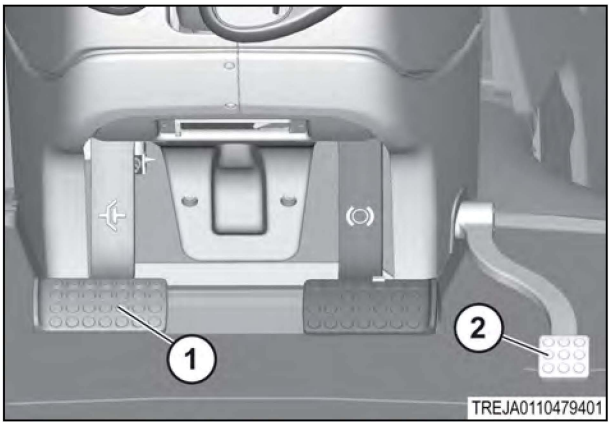

Fig. 198

NOTE: *Speed matching is expanded to all gears down to operator selected default target gear. Exception: If operator is manually commanding a forward target gear, manually selected forward target gear prevails over the default target gear.*

3.18.13 Inching pedal control

The machine has good lugging function. At times, the operator can lug the engine to the point that the engine will start to stall. At this point, the operator must quickly push on the inching pedal to prevent the engine from stalling. The operator must then:

1. Downshift to the correct gear
2. Reduce the load on the tractor by raising the implement
3. Shift the transmission into neutral
4. Release the inching pedal
5. Use the automatic modulation to engage the transmission by shifting forward or reverse, without using the inching pedal. This will automatically determine how quickly to engage the clutches according to the load and reduces the amount of slippage.

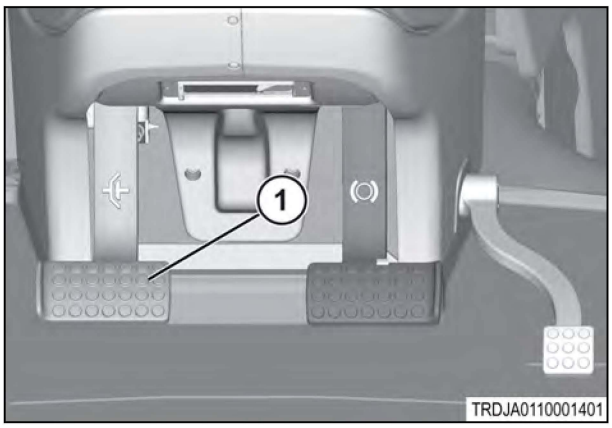

Fig. 199

Use the inching pedal control (1) to control the operation of the transmission in the following conditions.:

- Connecting implements
- Operating in tight spaces

Use the inching pedal to disengage the transmission when stopping the machine.

Do not use the inching pedal control when starting the machine under a load, or when changing gears during field operations.

Only use the inching pedal if low gears are not slow enough to give accurate control for operations. Repeated use of the inching pedal control for starting under a load will decrease the transmission life.

3.18.14 Brake control

WARNING:
The tractor stopping distance increases when towing heavy equipment. Do not transport faster than 32 km/h (19.9 mph) when towing equipment that is not equipped with brakes. Do not tow equipment that weighs more than one and a half times the weight of the tractor, unless functional trailer brakes are installed on the towed equipment. Failure to comply may lead to accident and personal injury.

WARNING:
A severely unbalanced machine will become unstable during braking. Reduce speed and use extra caution when roading a machine with mounted equipment or equipment with negative hitch weight. Failure to comply may lead to accident and personal injury.

3.18.15 Service brakes

Pushing the service brake pedal (1) applies equal braking force to both drive axles. When increasing pedal force, braking force is increased.

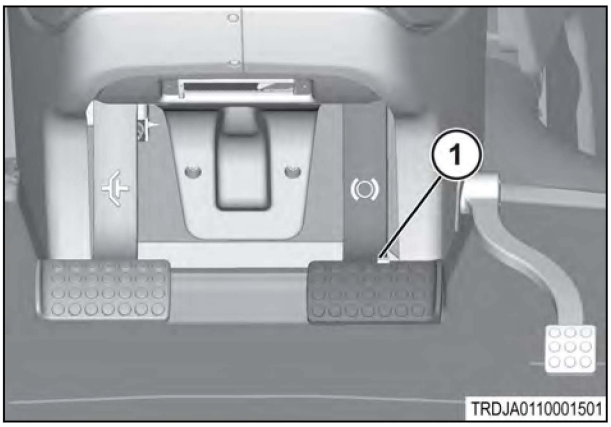

Fig. 200

The service brakes are hydraulically power assisted and are self-adjusting.

When the service brake pedal is pushed and the engine is stopped, the brake system uses the high-pressure oil stored in the brake accumulator. While the engine is off, a fully charged accumulator stores enough oil for a minimum of six applications of the brakes.

Start the engine to charge the brake accumulator again.

Periodically check the brake pedal with the engine off. The brake pedal must have a firm feel when pushing pedal. There must be sufficient brake pedal travel.

IMPORTANT: *Do not use the service brake pedal as a foot rest. When keeping pedal partially engaged, unnecessary wear on the brakes occur.*

3.18.16 Hydraulic trailer brake if equipped

The hydraulic trailer brake system uses pressurized oil from the implement hydraulic system to engage the trailer brakes. When the operator presses the service brake pedal, the service brake valve sends a signal to the trailer brake valve. The trailer brake valve sends pressurized oil from the implement hydraulic pump to engage the trailer brakes.

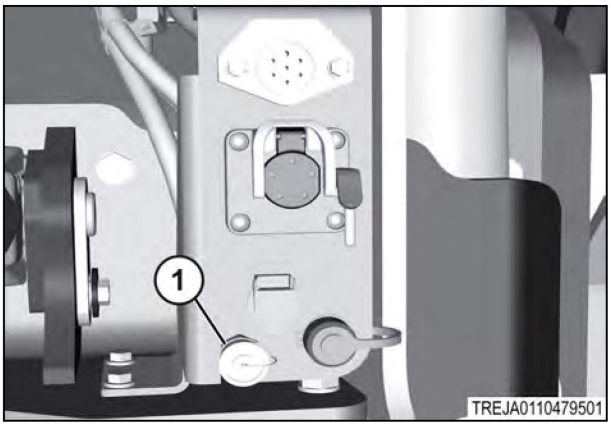

Fig. 201

The trailer brake system uses:

- Variable displacement piston pump
- Steering/priority valve
- Trailer brake valve
- Hydraulic oil reservoir
- Trailer coupler (1)

3.18.17 Park brake

IMPORTANT: *Do not engage the park brake while the machine is moving unless the primary service brake fails. Use of the park brake as a service brake in regular operation will cause damage to the brake system.*

Use the park brake to hold the machine stationary. Always engage the park brake and stop the engine before leaving the machine.

To stop the machine and to park the machine:

1. Move the transmission control lever to the neutral position.
2. Push the service brake pedal to stop the machine.
3. Move the transmission control lever to the park position by lifting the control lock (1).

   NOTE: *The park brake will apply after completing this step.*
4. Shut off the engine prior to leaving the the operator seat.

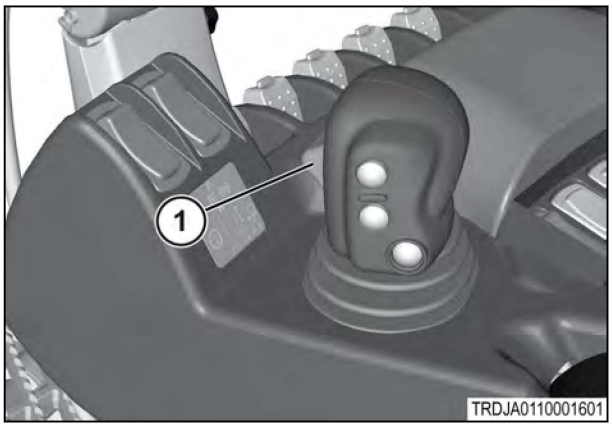

Fig. 202

The park brake is engaged automatically if the engine is shutoff and the ground speed is less than 1.5 mph.

For the park brake to engage:

1. The key must be in the run position.
2. The transmission control lever in the park position.

Spring tension engages the park brake. Hydraulic pressure disengages the park brake. Use the tow procedure if the engine stalls and no hydraulic pressure is available to release the park brake.

3.18.18 Manual parking brake handle

WARNING: *Since there is limited handle movement, the correct engagement of the manual parking brake can be difficult to detect. Approximately 15.9 kg (35 lb) of force is required to engage manual parking brake. Personal injury or death can result from unexpected machine movement. Park on a level surface and lower any implements to help prevent machine movement. Use wheel chocks to prevent movement of machine until repaired.*

WARNING: *After engaging manual park brake handle make sure lever returns to neutral position. Failure to put handle in neutral position can cause park brake failure, when unit is restarted and put into gear.*

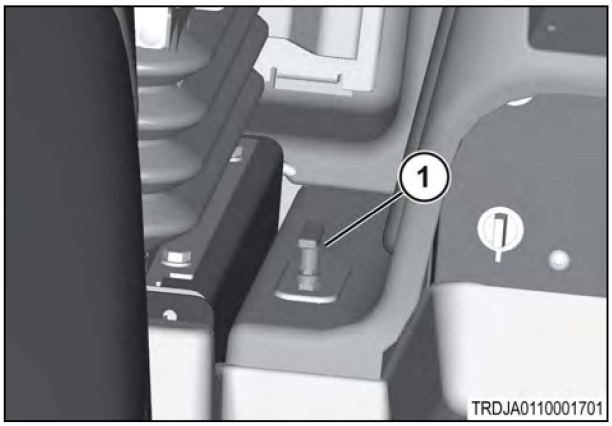

Fig. 203

The manual parking brake handle is on the left side of the operator's seat. Use the handle if no electrical power or a fault on the park brake solenoid, is shown on the machine management center.

To engage parking brake manually (1):

- Shift the transmission control lever to park
- Pull up on the handle
- Hold the handle for approximately five seconds to engage the parking brake

3.19 Overweight protection strategy (OWPS)

Overweight protection strategy (OWPS) protects the drivetrain from overload conditions that can reduce drivetrain life.

Overload conditions can occur when the machine is operating under the following conditions:

- Excessive ballast that exceeds recommendations.
- Implement weight transfer to the machine is more than the recommended for the hitch and drawbar.
- Mounting of the chemical tanks to the machine without taking the machine ballast limits into account.

OWPS reduces engine output torque in lower operating gears (1F thru 7F). Full tractive function is available in all gears. The reduction in engine torque will not be apparent to the operator unless the machine is operating in overload conditions.

3.20 Hydraulic controls

3.20.1 Hydraulic control valve operation

WARNING: *Personal injury or death can result from unexpected movement of an implement. Extension or retraction of a hydraulic cylinder depend on how implement hose connections are made. Make sure hoses for implement are connected to machine correctly and operate as expected. Clear area around machine of personnel and obstructions before operating implement.*

The hydraulic control valves are controlled by the hydraulic control levers on the right side console.

The hydraulic control valve No. 1, is located at the bottom of the hydraulic valve bank, which is located at the rear of the machine.

Each hydraulic control valve contains a load check valve in extend position and retract position. The load check valves are installed to limit drift of the implement. If the implement is in a raised position and the engine is disabled, the load check valves will prevent an implement from being lowered.

The hydraulic control levers have the following positions:

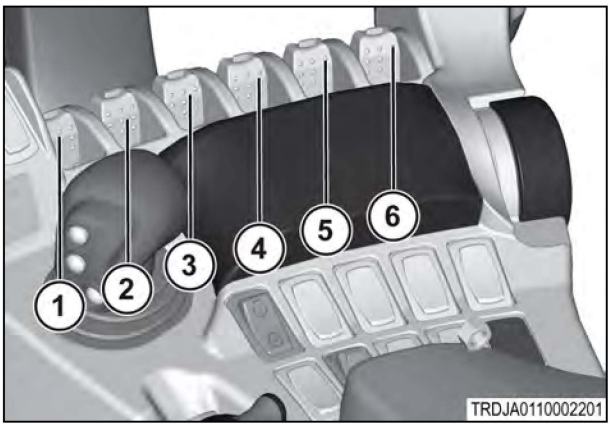

Fig. 204

- Hold position is used to hydraulically lock implement circuit when implement circuit is not in use.
- Pull back the hydraulic control lever for extend position to extend a hydraulic cylinder.
- Pull back the hydraulic control lever through extend position until a higher point of resistance is felt. Continue to pull lever through this point of resistance. This will start cycle for extend detent. Release lever. Lever will return to hold position. The hydraulic control valve continues to operate in detent function until cycle is complete.
- Push the hydraulic control lever forward to retract position to retract a hydraulic cylinder.
- Push the hydraulic control lever through retract position until the first point of higher resistance is felt. Continue to push lever through first point of resistance. This begins cycle for retract detent. Release lever.
- Lever returns to hold position. Implement control valve continues to operate in detent function until cycle is complete.
- Move the hydraulic control lever fully forward to put the hydraulic control valve in float position. When the hydraulic control lever is in float position, the hydraulic cylinder extends or retracts to follow the ground contour. The hydraulic control lever will not automatically return to hold position. Use float position to retract a single-acting cylinder. Use float position as off position for hydraulic motors.

The implement valves are located at the rear of the machine. The hydraulic control valve (1) is located at the bottom of the hydraulic valve bank.

- Hydraulic control lever (1) controls implement valve 1.
- Hydraulic control lever (2) controls implement valve 2.
- Hydraulic control lever (3) controls implement valve 3.
- Hydraulic control lever (4) controls implement valve 4.
- Hydraulic control lever (5) controls implement valve 5.
- Hydraulic control lever (6) controls implement valve 6.

The left side coupler of the hydraulic control valve is extend port and the right side coupler is retract port.

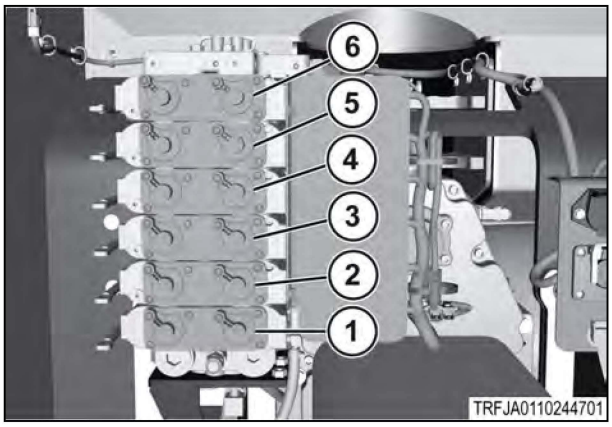

Fig. 205

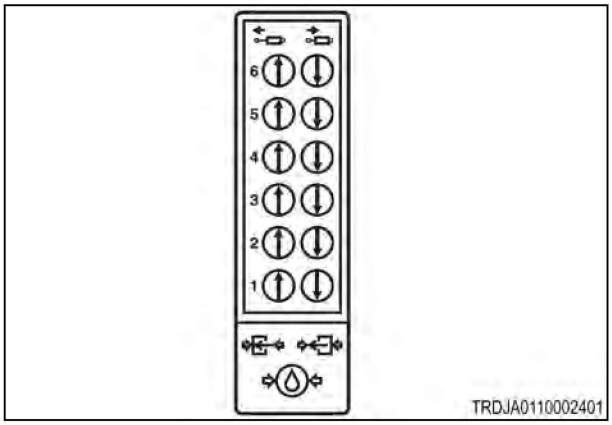

Fig. 206

3.20.2 Roading lockout switch for the hydraulic control levers

The roading lockout switch (1) lets the operator disable all functions for hydraulic control valves.

In addition to hydraulic control valves, roading lockout switch will disable the following operations:

- Decelerator pedal
- 3-Point linkage
- One-Touch mode
- Power Take-Off (PTO)
- Auto-Guide

When pressing the front of the switch, all hydraulic control valves are placed in the hold position. A hydraulic control can be in a position that will not let the valve enter the hold position.

The following positions will not let the valve enter hold position:

- Float
- Retract Detent
- Extend Detent

The hydraulic control valve in the float position will continue to stay in the float position until the hydraulic control lever is moved out of the float position.

If a hydraulic control valve is in a detent position, valve continues to stay in the detent position until timed detent expires.

If hydraulic control valve is in a continuous detent, valve continues to remain in detent position until hydraulic control lever is moved out of hold position.

To release lockout switch, forward position release must be pulled back before switch releases to off position.

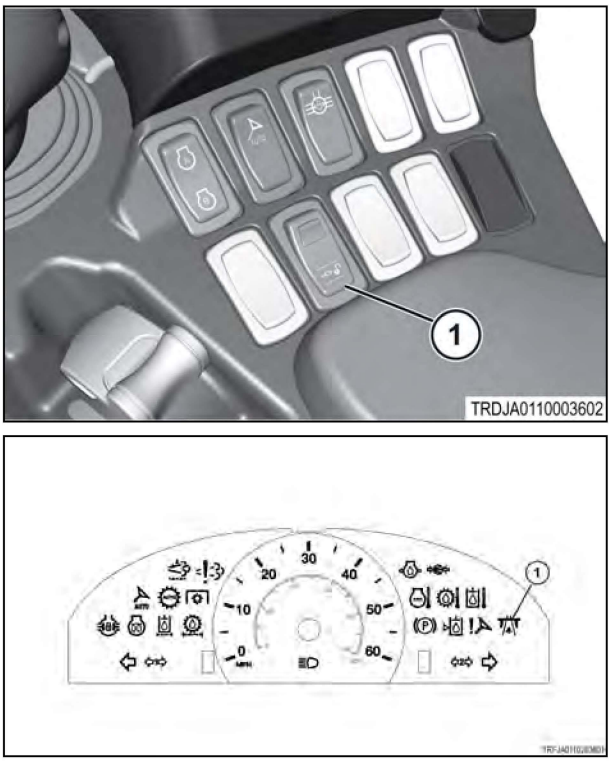

Fig. 207

3.21 General hydraulic connections

3.21.1 General hydraulic connections

Couplers for machine accept ISO 5675 standard connectors.

The couplers on the left side of the valve bank are pressurized when the control lever is in the extend position.

The couplers on the right side of the valve bank are pressurized when the control valve is in the retract position.

3.21.2 Connecting the hoses to the quick couplers

NOTE: *Both the male and the female portions of the quick couplers are wear items. Before connecting the hoses, inspect the couplers for signs of wear. Replace if necessary.*

NOTE: *To improve the life of the quick couplers, correctly support the hoses, alleviating stresses on the couplers.*

IMPORTANT: *Always wipe inside of the coupler and outside of the connector tip. Clean with a clean, lint free cloth, prior to connection. Failure to do so, reduces life of the quick coupler, and contaminates oil in the implement circuit.*

Move the hydraulic control lever to the hold or the float position.

1. Rotate the dust caps (1) up, to access the quick coupler.
2. Push the lever (2) down to release any hydraulic pressure. This step is especially important if the hydraulic control valve is left in the hold position. After the lever (2) has been actuated, the lever may be released.
3. Firmly push the hoses into the coupler (3).

Fig. 208

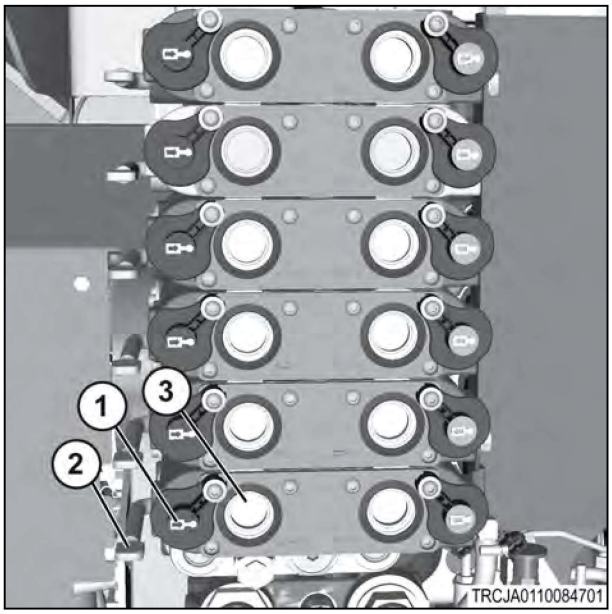

Fig. 209

3.21.3 Disconnecting the hoses from the quick couplers

1. Lower the implement to the ground.
2. While engine is running, move hydraulic control lever to hold or float position.
3. Stop engine.
4. Push down the lever (2), remove the hose and close the dust caps (1).

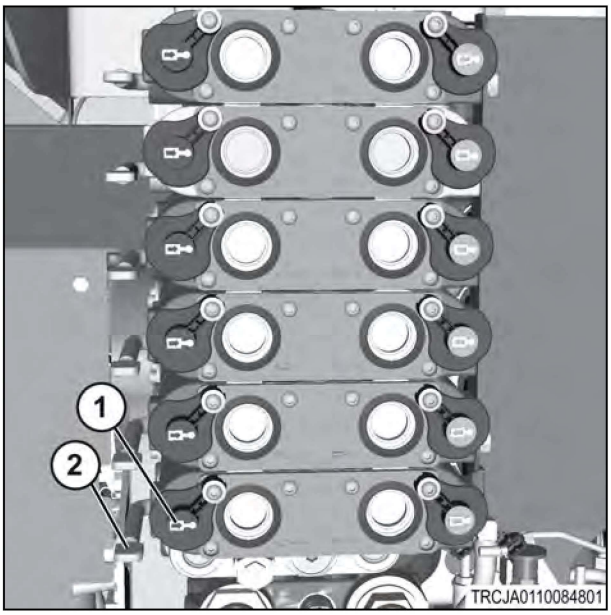

Fig. 210

3.21.4 Hydraulic flow management

Operating hydraulic flow management simultaneously.

Adjust the flow control to minimum amount required by the implement.

The remaining pump flow, supplies the remaining hydraulic flow management.

NOTE: *The effects of excessive flow demand can be minimized by adjusting the flow rate of each valve to the lowest acceptable value.*

3.21.5 Hydraulic motors

After starting the engine, push the hydraulic control lever fully forward into the float position. The float position is used as the off control for the motor.

Using the float position to stop the motor, allows the motor to coast to a stop.

Retract position engages the motor.

The hydraulic control lever can be held in position to operate the motor.

A continuous detent provides more convenience if planning to operate the motor for more than a few seconds.

The vacuum planter would be an example of an application operated in one of these configurations.

IMPORTANT: *If the hold position is used to stop the motor, damage to the motor and related hydraulic components can occur. Because of the hold circuit making a hydraulic lock effect, it forces hydraulic motor to stop suddenly.*

3.21.6 Selection of hydraulic motors

The implement hydraulic system is a closed center, load sensing hydraulic system. The hydraulic system compensates for flow and pressure.

Use the hydraulic motors designed for the machine's hydraulic system. Do not use a hydraulic motor designed for an open center hydraulic system, unless motor has been adapted, by removing restrictor for inlet. Otherwise, excessive heating of oil may occur.

Hoses having an inside diameter of 12.7 mm (0.5 in) are acceptable for motors that operate at less than 38 l/min (10 gal/min). Motors that require greater flow should use hoses with an inside diameter of 19 mm (0.75 in).

3.21.7 Single acting cylinders

NOTE: *A single-acting cylinder will typically have only one hose that needs to be connected.*

Procedure

1. Connect the hose to the + coupler (1) on the desired hydraulic control valve.
2. To extend the cylinder, pull the control lever back to the extend position.
3. To retract the cylinder, push the lever forward to the retract position.

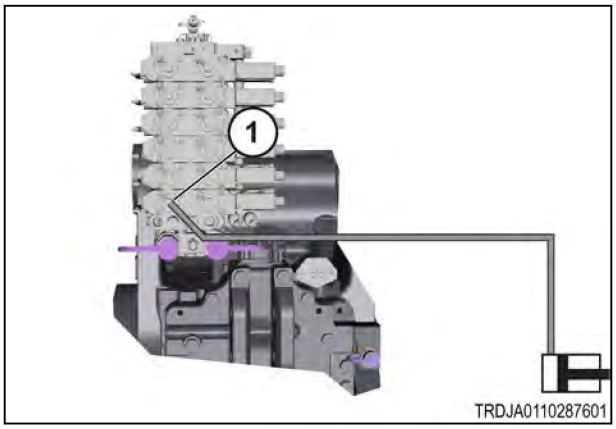

Fig. 211

3.21.8 Checking a double acting cylinders

Procedure

1. Connect the pressure hose from the double acting cylinder to the extend coupler (1) of the desired control valve.
2. Connect the return hose to the retract coupler (2) of the same hydraulic control valve.
3. To extend the cylinder, pull the hydraulic control lever rearward to the extend position.
4. To retract the cylinder, push the lever forward to the retract position.
5. Pushing the lever fully forward, selects the float.

   The float position permits the cylinder to freely extend, and will also permit the cylinder to freely retract.

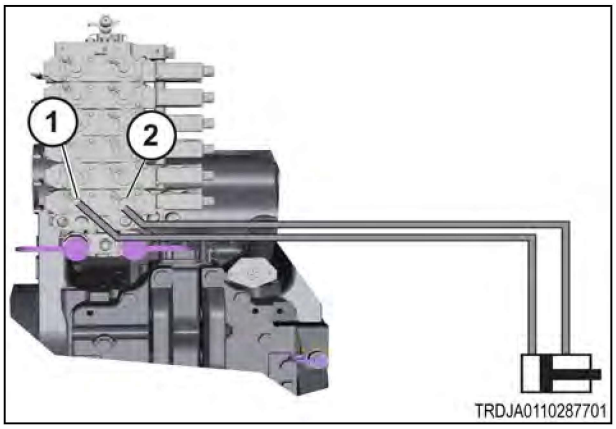

Fig. 212

3.21.9 Connecting hydraulic motors to the control valves

NOTE: *Hydraulic motors can be connected to any hydraulic control valve.*

Procedure

1. Connect the pressure hose to the - coupler (2).
2. Connect the return hose to the + coupler (1).
3. If the motor is equipped with a case drain return line, connect this line to the case drain return port (3).

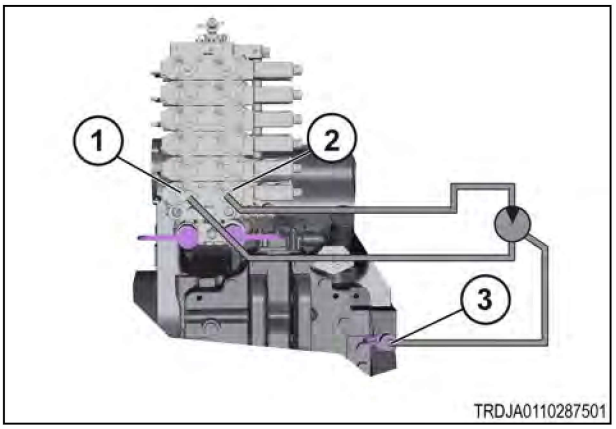

Fig. 213

3.21.10 Connecting a grain cart with an auger motor

The grain cart is equipped with the following items:

- A hydraulic auger motor with a high flow demand (1).
- A cylinder for folding the auger (2).
- A cylinder for opening the gate to the auger (3).

Procedure

1. The auger motor (1) can be supplied with a second pressure line if more pressure is required (6).

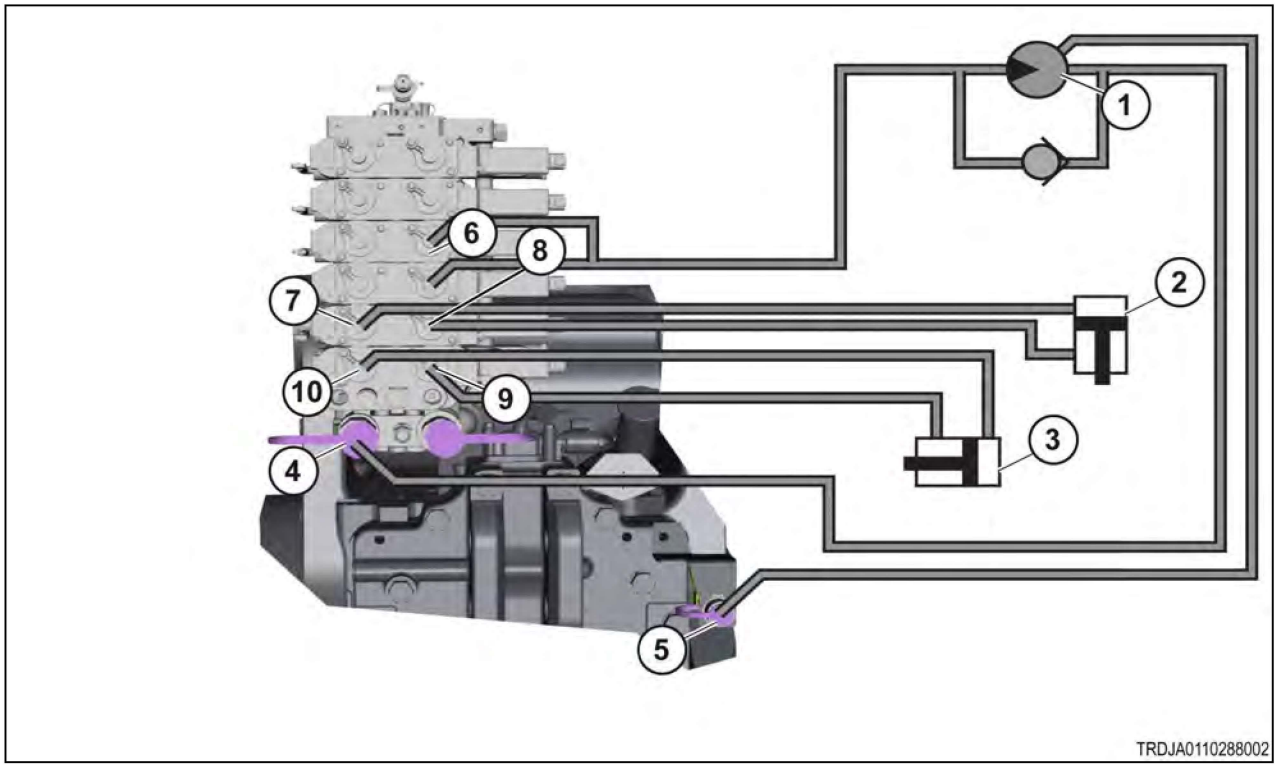

Fig. 214

2. Connect the return hose to the coupler (4) on the hydraulic power beyond.
3. Connect the case drain return line to the case drain return port (5).
4. Find the hoses for the folding auger cylinder (2).
5. Connect the pressure hose to the extend coupler (7) on the desired hydraulic control valve.

6. Connect the return hose to the retract coupler (8) of the same hydraulic control valve.
7. Find the hoses for the gate control cylinder (3).
8. Connect the pressure hose to the extend coupler on the desired hydraulic control valve (10).
9. Connect the return hose to the retract coupler (9) of the same hydraulic control valve.

3.21.11 Semi - mounted vacuum planter with the lift assist wheels

Procedure

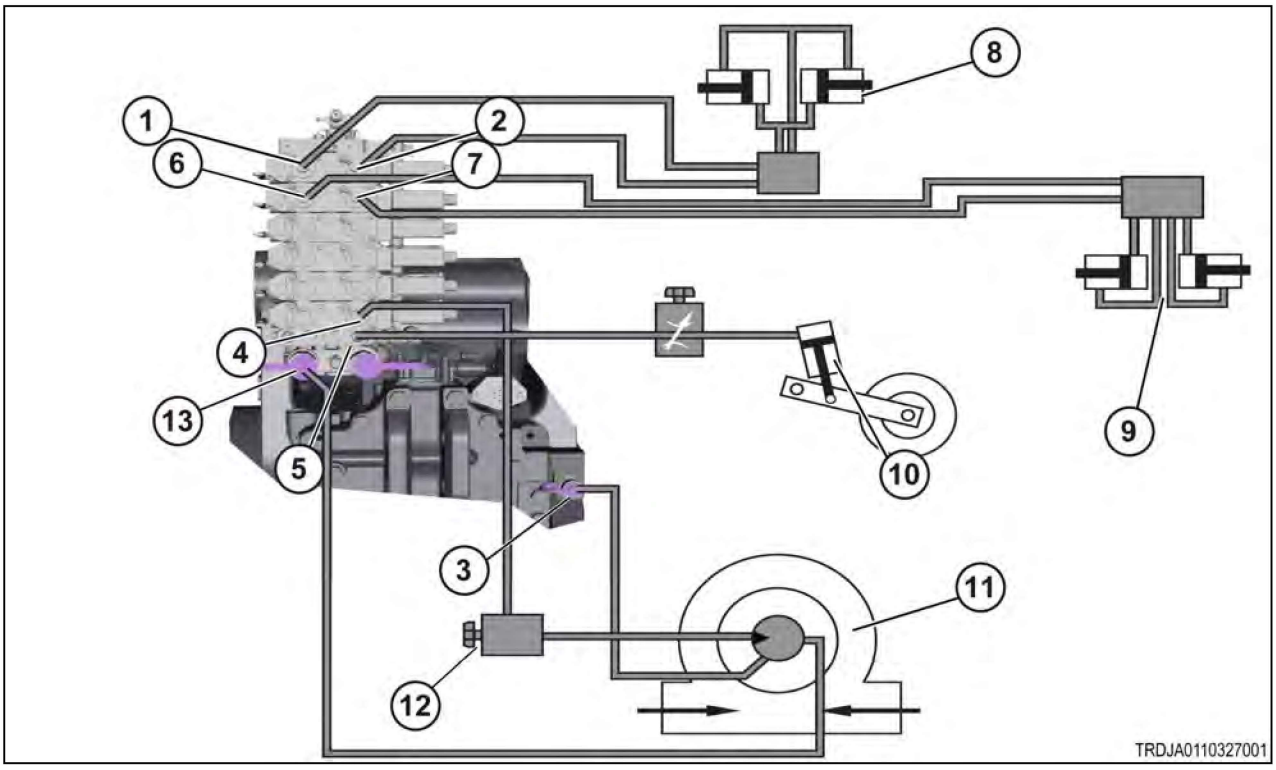

Fig. 215

1. Connect the vacuum motor (11) pressure hose to the coupler (4) on the desired hydraulic control valve.

   NOTE: *The flow control valve* (12) *must be left in the full open position. The flow rate to the motor must be controlled by the terminal.*
2. Connect the return hose to the coupler (13) on the hydraulic power beyond.
3. Connect the case drain return line (3) to the case drain return port.
4. Connect the cylinders for the lift assist wheels (10) to the lift assist port (5).
5. Connect the cylinders for the markers (9).
6. Connect pressure hose to lift assist port (8)
7. Connect the pressure hose to the coupler (7) on the desired hydraulic control valve.
8. Connect the return hose to the coupler (6) of the same hydraulic control valve.
9. Connect the cylinders for the folding planter (4).
10. Connect the pressure hose to the coupler (2) on the desired hydraulic control valve.
11. Connect the return hose to the coupler (1) of the same hydraulic control valve.

3.21.12 Connecting the vacuum planter

NOTE: *The flow control valve* (9) *must be left in the full open position. The flow rate to the motor must be controlled by the terminal.*

Procedure

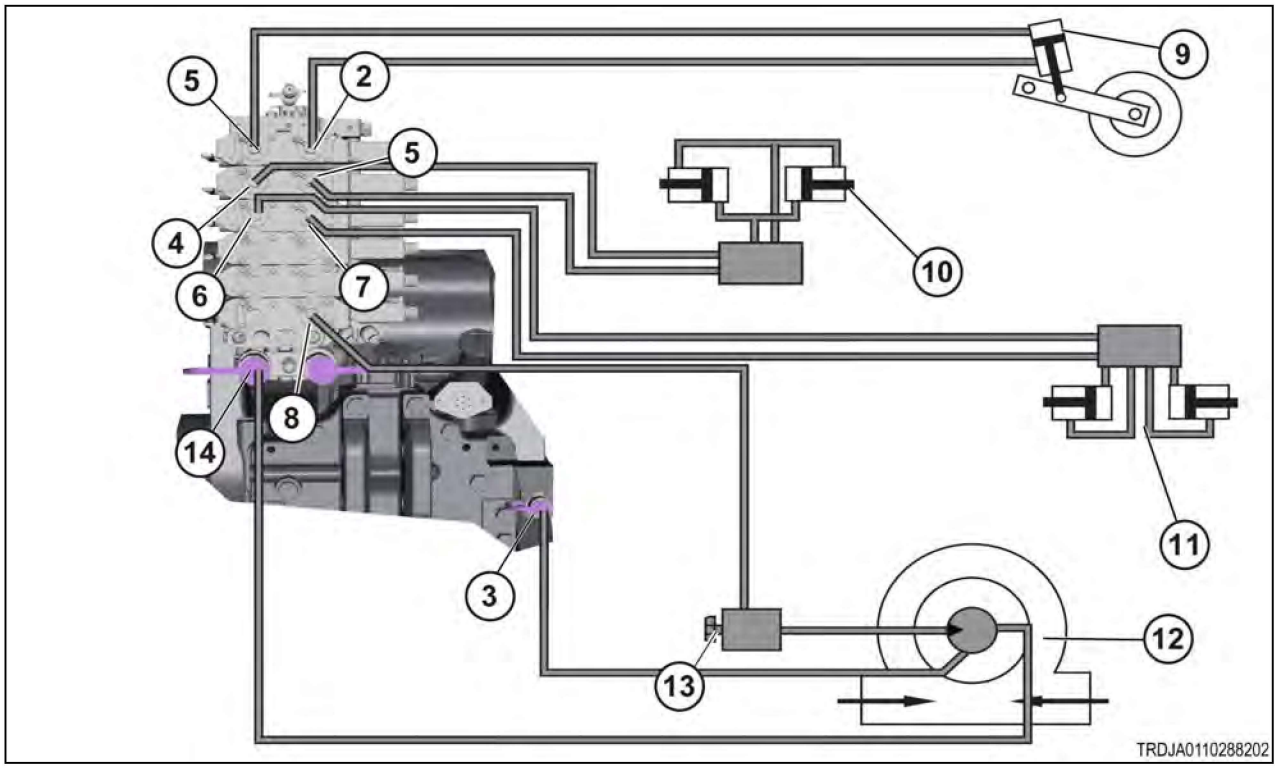

Fig. 216

1. Connect the vacuum motor (12) pressure hose to the coupler (5) on the desired hydraulic control valve.
2. Connect the case drain return line to the case drain return port (3).
3. Connect the motor return to the power beyond (14).
4. Connect the cylinder (9) for lifting the planter.
5. Connect the pressure hose to the coupler (2) on the desired hydraulic control valve.
6. Connect the return hose to the coupler (1) of the same hydraulic control valve.
7. Connect the cylinder for the markers (11) by connecting the pressure hose to the coupler (7) on the desired hydraulic control valve.
8. Connect the return hose to the coupler (6) of the same hydraulic control valve.
9. Connect the cylinder for the folding planter (10) by connecting the pressure hose to the coupler (5) on the desired hydraulic control valve.
10. Connect the return hose to the coupler (4) of the same hydraulic control valve.

3.21.13 Connecting the air seeder or the grain drill

Procedure

1. Connect the pressure hose for the fan motor (11) to the coupler (2) on the desired hydraulic control valve.

NOTE: *The selector valve* (10)*can be used to select either the fan motor or the fill auger*(8). *The reverse valve* (9)*can be used to change the turn of the fill auger.*

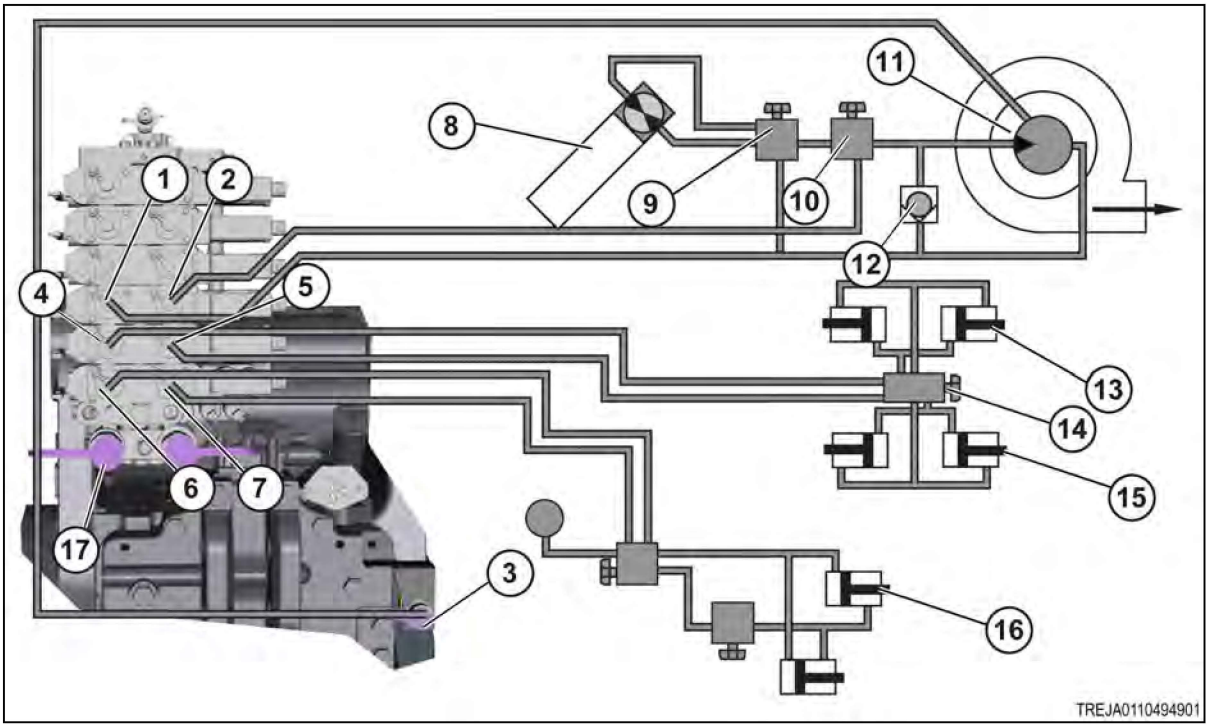

Fig. 217

2. Connect the return hose to the coupler (1) on the same hydraulic control valve.

3. Connect the case drain line to the case drain return (3).

NOTE: *If machine is equipped with power beyond, connect the return hose from the motor, to the return coupler* (17).

NOTE: *Overrunning the check valve* (12)*prevents the motor from stopping suddenly, when the hydraulic control lever is put in the hold position.*

4. Connect the selector valve (14) pressure hose to the coupler (4) on the desired hydraulic control valve. Connect the return hose to the coupler (5) of the same hydraulic control valve.

NOTE: *The selector valve can be used to select either the fold cylinders* (13) *or the marker cylinders* (15) .

5. Connect the cylinders (16) for constant down pressure on the openers.

6. Connect the pressure hose to the coupler (6) on desired hydraulic control valve.

7. Connect the return hose to the coupler (7) of the same hydraulic control valve.

8. Detent time needs to be set to continuous flow to keep a constant down pressure on openers.

3.21.14 Connecting the spray system pump

Procedure

1. Connect the spray system pump pressure hose to the coupler (2) on the desired hydraulic control valve.
2. Connect the return hose to the coupler (1) on the same hydraulic control valve.

   NOTE:
   If the machine is equipped with a hydraulic power beyond, connect the return hose to the coupler (3) *on the hydraulic power beyond.*
3. Open the needle valve (8). The flow rate to the pump must be controlled by the terminal display.

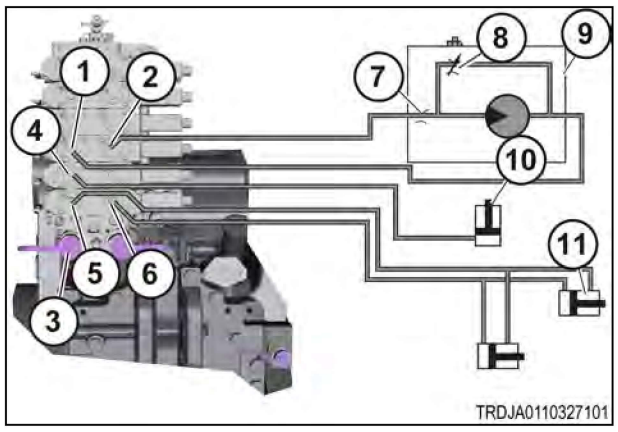

Fig. 218

4. Remove the inlet orifice (7).
5. Connect the cylinder for raising the boom (10).
6. Connect the pressure hose to the coupler (4) on the desired hydraulic control valve.
7. To fold the booms (11), connect the cylinder pressure hose to the coupler (5) on the desired hydraulic control valve.
8. Connect the return hose to the coupler (6) of the same hydraulic control valve.

3.21.15 Connecting the auxiliary implement controls

Procedure

1. Connect the pressure hose to the + coupler (1).

   NOTE: *Auxiliary implement control valves can be connected to any hydraulic control valve.*

   NOTE: *For auxiliary implement controls to function, the implement must be set to extend and be commanded on.*
2. Connect the return hose to the return coupler (2) on the hydraulic power beyond.

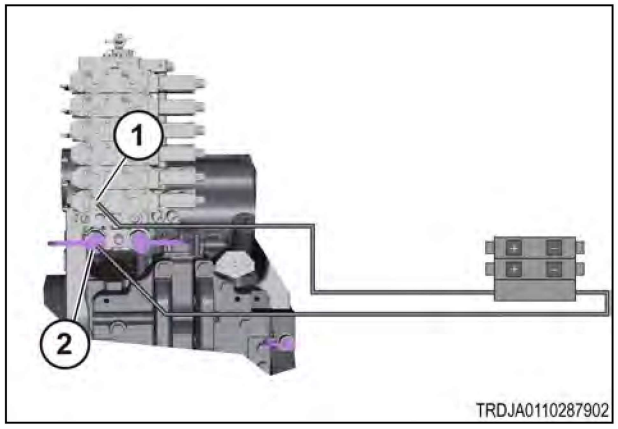

Fig. 219

3.21.16 Hydraulic power beyond

NOTE: *The implement hydraulic system on the machine receives a hydraulic power beyond system. See your dealer for information necessary to install the hydraulic power beyond system on the machine.*

The hydraulic power beyond is equipped with the following couplers:

(1) Return

(2) Pressure

(3) Load sense

A coupler is available in the following size:

- 3/4 inch for more than 60 l/min (16 gal/min) of continuous flow

A 3/4 inch return coupler is also available for use as a low pressure return.

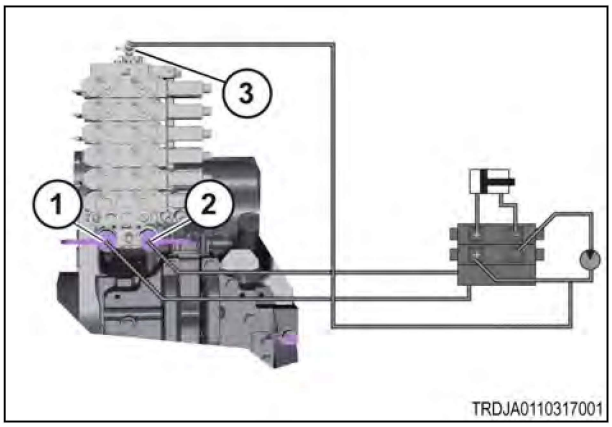

Fig. 220

3.21.17 Connecting a hydraulic motor to power beyond

NOTE: *Return oil from the hydraulic motor can be connected to the hydraulic power beyond.*

Procedure

1. Connect the pressure hose to the coupler (1).
2. Connect the return hose to the return coupler (2) on the hydraulic power beyond.
3. If the motor is equipped with a case drain return line, connect the case drain return line to the case drain return port (3).

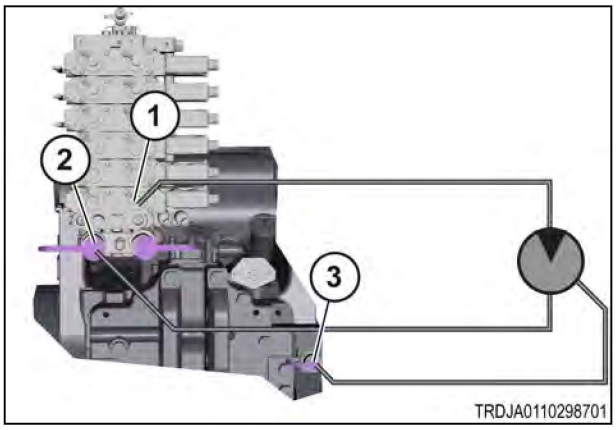

Fig. 221

3.21.18 Connecting the auxiliary implement control valve with load sensing

Procedure

1. **NOTE:** *This example shows an auxiliary implement control valve bank* (1) *equipped with a load sense port* (2).

   Connect the pressure hose to the pressure coupler (4) on the hydraulic power beyond.

2. Connect the return hose to the return coupler (3) on the hydraulic power beyond.

3. Connect the load sensing signal line to the load sensing coupler (5) on the hydraulic power beyond.

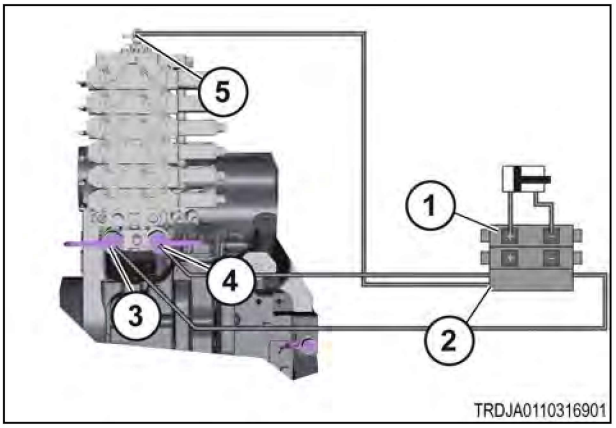

Fig. 222

3.21.19 Connecting the auxiliary implement control valve without load sensing

Procedure

1. This example shows an auxiliary implement control valve bank having the following characteristics.

   - no load sense port
   - one circuit (6) demanding oil greater than 2070 kPa (300 psi)
   - one circuit (7) demanding oil greater than 2070 kPa (300 psi)

   The valve bank (1) is not equipped with a load sense port. The load sensing signal, needs to be sensed in the pressure line (5) supplying the valve bank.

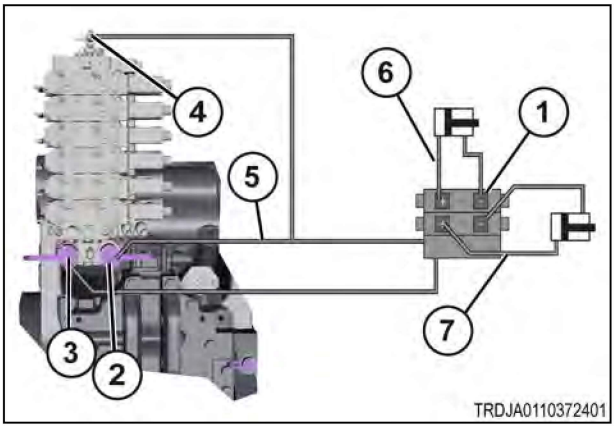

Fig. 223

   NOTE: *This configuration provides the maximum system pressure of 19995 ± 345 kPa (2900 ± 50 psi) whenever the engine is running. This configuration, generates an additional heating of the hydraulic oil.*

2. Connect the pressure hose (5) to the supply port (2) on the hydraulic power beyond.

3. Connect the return hose to the return coupler (3) on the hydraulic power beyond.

4. Connect the load sensing signal line to the load sensing coupler (4) on the hydraulic power beyond.

3.21.20 Auxiliary implement control valve bank

NOTE: *The hydraulic pump always provides at least 2070 kPa (300 psi) when the pump is at low pressure standby. If the circuit demands more than 2070 kPa (300 psi) the hydraulic motor on the circuit will need to be running. The circuit sends a load sensing signal causing the hydraulic pump to upstroke.*

Characteristics of an auxiliary implement control valve bank:

- No load sense port
- One circuit demanding oil greater than 2070 kPa (300 psi)
- One circuit demanding oil less than 2070 kPa (300 psi)

The valve bank is not equipped with a load sense port. The load sensing signal needs to be sensed at point after valve.

3.21.21 Connecting the hydraulic motor with the flow control valve

The load sensing signal needs to be sensed in the pressure line between the flow control valve and the motor.

Procedure

1. Connect the pressure hose to the supply coupler (1) on the hydraulic power beyond.
2. Connect the return hose to the return coupler (2) on the hydraulic power beyond.
3. Connect the load sensing signal line to the load sensing coupler (3) on the hydraulic power beyond.
4. Connect the case drain return line to the case drain return port (4).

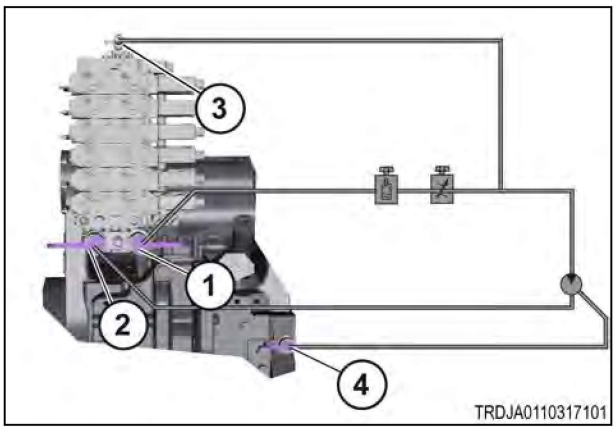

Fig. 224

3.22 Electrical system

3.22.1 Radar unit

WARNING: *Do not look directly into ground speed sensor while in operation. Eye injury may occur from low intensity microwave signal emitted.*

Machine is equipped with a radar unit (1).

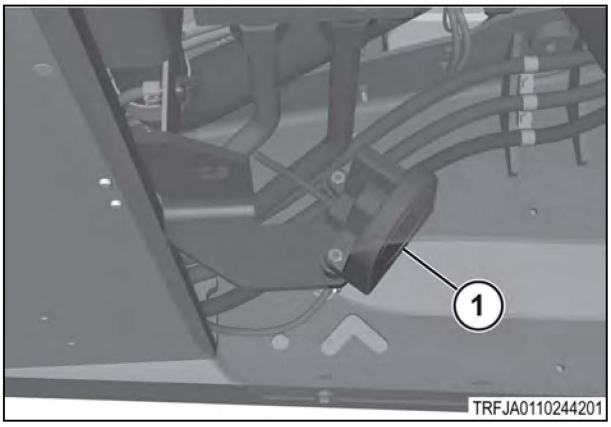

Fig. 225

3.22.2 Radar connector

Some implement electronic controls use a signal from radar. Implements that require a signal can use a four-pin connector (1).

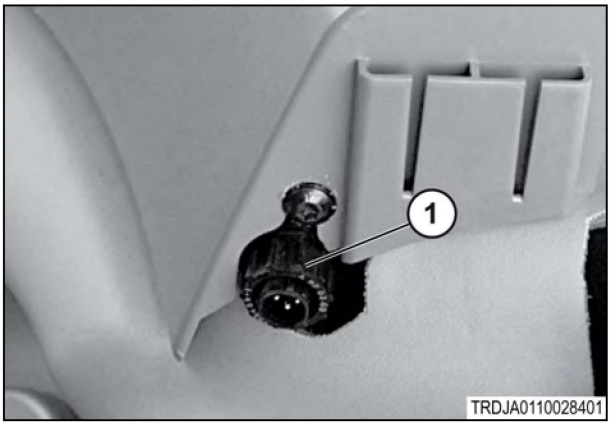

Fig. 226

To reach the four-pin connector, remove the cover (1) located behind the operator seat. This connection operates only if a radar unit is installed.

IMPORTANT: *If the wiring is not correct, the controller or other components in the electrical systems can be damaged. See your dealer for more information and for wiring pin-out.*

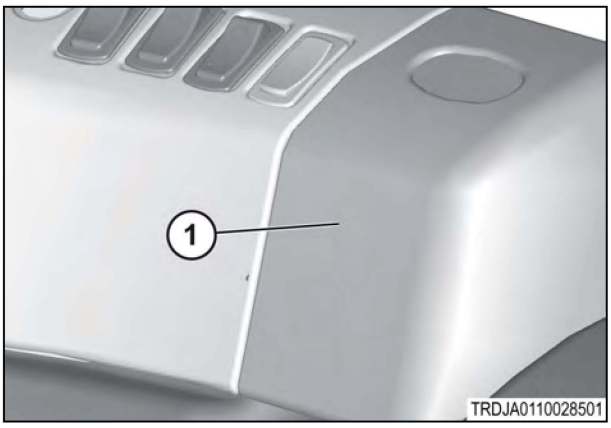

Fig. 227

3.22.3 Battery disconnect switch

IMPORTANT: *Do not operate the engine with the battery cables disconnected or with the battery disconnect switch in disconnect position. Do not use a fast charger or weld on vehicle with the battery cable connected. Damage to the electrical system occurs if these instructions are not followed. Turning the battery disconnect switch to the disconnect position will not stop a running engine and can damage electrical equipment. Always stop the engine before placing the battery disconnect switch in the disconnect position or disconnecting battery.*

The battery disconnect switch (1) should be placed in the disconnect position any time machine will not be operated for four days or longer. This will help keep the best battery performance. The battery disconnect switch key should be removed to ensure that position is not accidentally changed. The battery disconnect switch must be in the connect position to allow machine to start.

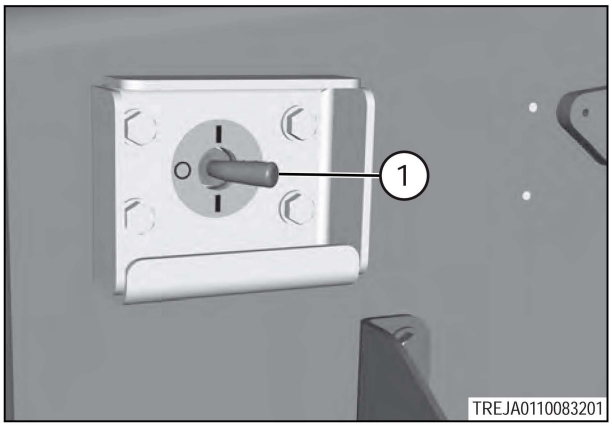

Fig. 228

3.22.4 Single pole connectors

There are three single pole connectors in the machine cab.

(1) Provides 12 volt switched power. It can be used to power items rated for ten amperes, and it also serves as a cigarette lighter.

(2) Provides 12 volt switched power.

(3) Provides 12 volt switched power, and is located under the instructor seat. Shares the 10 amperes with connector (2).

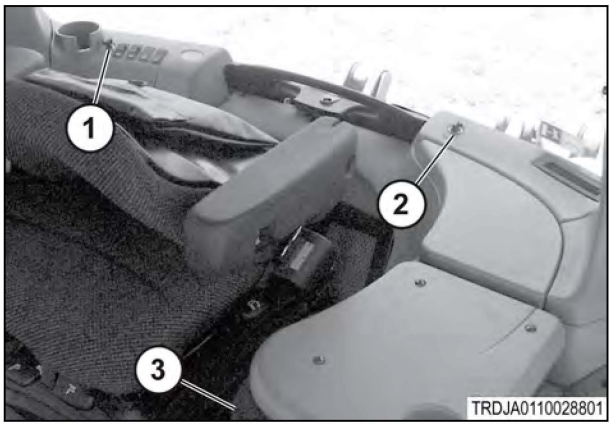

Fig. 229

3.22.5 Auxiliary power switch

The auxiliary power switch (1) controls power to the auxiliary pin A, number seven on the trailer connector.

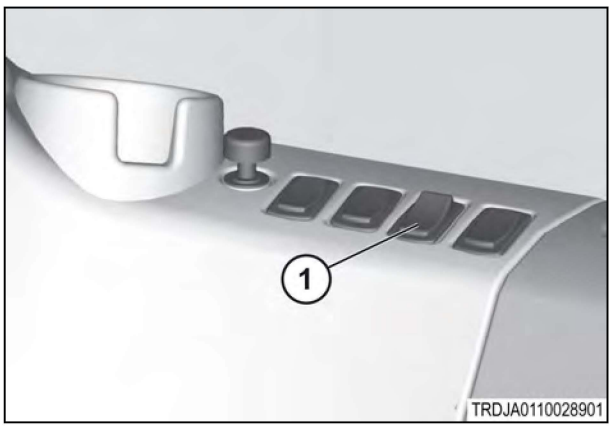

Fig. 230

3.22.6 Trailer connector

An SAE 12 volt seven pin connector is mounted next to hydraulic control valve at rear of machine. Use connector to power systems on implements.

Pin (4) is powered when engine start switch is in the RUN position.

Pin (7) is powered when engine start switch is in the ON position.

Ground - (1)

Work Lights (15 ampere) - (2)

Left Turn signal (5 ampere) - (3)

Brake Light (5 ampere) - (4)

Right Turn Signal (5 ampere) - (5)

Tail Lamps (5 ampere) - (6)

Auxiliary A (15 ampere) - (7)

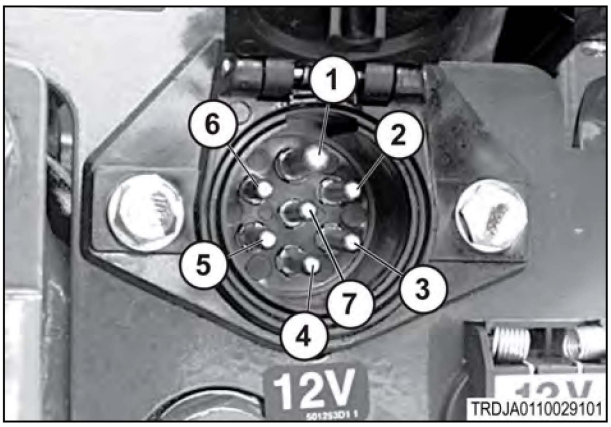

Fig. 231

3.22.7 Routing the implement cable

The electrical cables from an implement can be routed into the cab. The rubber grommet is found at the bottom of the frame for the rear window.

1. Remove the grommet (1) from the window frame.
2. Cut a slit into the grommet from the bottom of the grommet into the hollow center (2).
3. Put the cables from the implement through the grommet.
4. Install the grommet into the window frame.

   IMPORTANT: *Seal the slit in the grommet when removing the cables from the cab. The sealing prevents dirt and noise from entering the cab.*

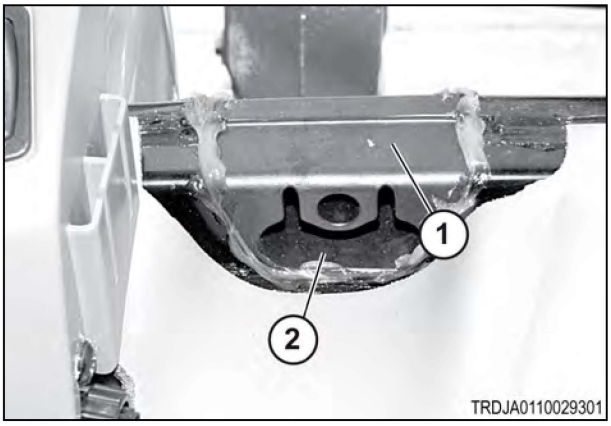

Fig. 232

3.22.8 ISO 11783 connector

The ISO 11783 connector (1) is at the rear of the machine. This connector interfaces with the implements that use ISO 11783 electronic communication.

Pin number	Description
Pin 1	ISO ground (60A)
Pin 2	ISO ECU ground (25A)
Pin 3	ISO power (60A)
Pin 4	ISO ECU power (25A
Pin 5	TBC DIS
Pin 6	TBC power

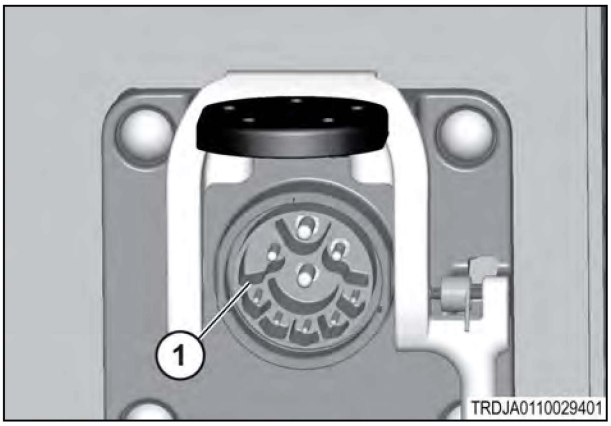

Fig. 233

Pin number	Description
Pin 7	TBC ground
Pin 8	ISO CAN high
Pin 9	ISO CAN low

3.23 Machine performance

To get maximum productivity from machine, make sure machine is correctly setup for specific application. Correct setup is critical to optimizing performance of machine.

The following items will directly determine the performance of machine:

- Position of drawbar - When drawbar moves freely, performance of machine is better.
- Vertical loading of drawbar - Drawbar must be correctly configured for the amount of vertical load on machine.
- Adjustments of the 3-point linkage components - The 3-point linkage must be correctly adjusted for specific implement.
- Draft Control - Draft Sensitivity setting will change the operation of the 3-point linkage.
- Slip Control - Slip Sensitivity setting will change the operation of the 3-point linkage
- Total weight of machine - The operator must know the total weight of machine to adjust the amount of ballast to maximize tractive efficiency.
- Fore/aft balance of machine - Correctly balance the machine to maximize stablility and tractive efficiency. This will help minimize soil compaction.
- Type of field operation - Row crop applications require machine to be configured differently than tillage applications. Turning radius of this machine is very small. Whenever possible, use two 90 ° turns during row crop applications.
- Soil conditions - Soil conditions change performance of machine. Unsatisfactory conditions can limit productivity of machine.
- Setup of implement - See the operator manual for how to set up implement correctly.
- Desired travel speed - Machine must be configured to operate in recommended working range of ground speeds for maximum productivity.
- Operator training - If operator is correctly trained, satisfactory use of machine will increase.

3.24 Towing and transportation

3.24.1 Roading the machine

WARNING: *Failure to operate the hazard lights can cause incorrect identification of machine, and can result in an accident and personal injury. Always use flashing hazard lights when traveling on public roads and accesses to inform traffic of a slow-moving machine.*

Check all fluid levels before roading machine.

Check travel route for overhead clearance and travel route for correct width.

Install a slow moving vehicle sign on rear of machine. Only install sign if local regulations permit installation.

Before roading machine, make sure the following equipment is visible and works correctly:

- Brake lights
- Hazard lights
- Turn signals
- Tail lamps

WARNING: *Use of the work lamps when traversing public roads and accesses can cause an accident and personal injury. Work lamps can decrease vision of the approaching traffic and obscure flashing hazard lights. Only head lamp position of the master light switch must be used when traversing roads.*

Move multifunction switch to position for low beam headlights.

Use the hazard lights along with the low beam headlights while roading the machine.

Engage the roading lockout switch to disable the following functions:

- Hydraulic control valve bank
- Decelerator pedal
- 3-Point linkage
- Auto-Guide
- Steerable 3-point linkage
- Power Take-Off (PTO)

Reduce speed when roading a machine equipped with a full set of front counterweights.

Reduce speed if direction stability of machine is noticeably reduced.

Reduce speed if road surfaces change from one type of surface to another type of surface.

When towing drawbar implements, adjust stops to prevent swing.

IMPORTANT: *When roading machine, throttle back and then reduce speed by downshifting the transmission. Do not reduce machine speed by reducing engine speed. Higher engine speeds maximize steering response.*

When roading with trailers not equipped with brakes following guidelines need to be followed:

- Trailer weight cannot exceed 1.5 times machine weight.
- Combined machine and trailer weight cannot exceed 56 750 kg (125 000 lb) .
- Maximum machine speed cannot exceed 32 km/h (19.9 mph) .

When roading with trailer equipped with brakes following guidelines need to be followed:

- Trailer weight cannot exceed 4.5 times machine weight.
- Combined machine and trailer weight cannot exceed 124 850 kg (275 000 lb) .
- Maximum machine speed cannot exceed 40 km/h (24.9 mph) .

3.24.2 Roading with a 3-point linkage mounted implement

WARNING:
Accidental lowering of the 3-point linkage while roading, can damage road surface, and implement. Accidental lowering can cause an accident or result in personal injury. When transporting the 3-point linkage mounted equipment, raise implement by positioning the 3-point linkage control lever in a fully rearward position. Set adjustable stop against front edge of the lever to help prevent accidental forward lever movement. Set the 3-point linkage raise/lower switch to the raise position as an additional transport position safeguard.

When transporting the equipment, monitor the following recommendations:

- The 3-point linkage control lever (1) must be pulled fully in rearward direction.
- Rotate the lever mechanism to set adjustable depth stop against the 3-point linkage control lever.
- Put the raise/work switch (2) in the raise position.
- Engage the roading lockout switch (3).



Fig. 234

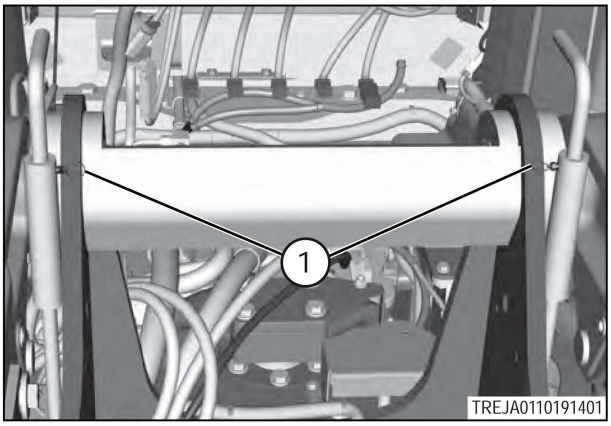

Fig. 235

3.24.3 Basic towing

The towing instructions are for moving a disabled machine for a short distance at low speed. Move the machine at a speed of less than 2 km/h (1.2 mph) . These instructions are only for emergencies. Always haul the machine if long distance moving is required.

Install shields on both machines. Shields protect the operator if either the tow line or the bar breaks.

Do not let an operator be on the machine being towed, unless the operator can control the steering and the braking.

Before towing, make sure the towing line or the bar is in good condition.

Make sure the tow line or the bar has enough strength for the towing procedure. The strength of the towing line or the bar must be a minimum of 150% of gross weight of the towing machine.

Do not use a chain for pulling a disabled machine. A chain link can break. This can cause possible personal injury. Use a cable with looped or ringed ends. Position another person to monitor the pulling procedure, and to stop the procedure if the cable starts to break, or the cable starts to unravel. Stop pulling if the towing machine moves without moving the towed machine.

Keep the tow line angle less than 30° from the straight forward position.

Quick machine movement can overload the tow line or the bar, causing the tow line or the bar to break. Slow, constant machine movement will be more effective.

The towing machine must be as large as the disabled machine. Make sure the towing machine has enough brake capacity, enough weight, and enough power. The towing machine must be able to control both machines for the grade and for the distance.

The machine must be equipped with a brake system operated from the operator's compartment when the towed machine is loaded.

When moving a disabled machine downhill, a larger towing machine, or additional machines connected to the rear may be needed to prevent the machine from rolling out of control.

When towing the machine from the rear, tow the machine from the drawbar. If the machine must be towed from the front, make sure the load is equally balanced.

Minimum towing capacity is required on smooth, level surfaces. Maximum towing machine capacity is required on inclines or on surfaces in poor condition.

3.24.4 Towing a stuck machine

Be careful when towing a machine that becomes stuck. Disconnect any equipment and remove the equipment separately.

First, remove material from the area around the machine. Remove material from the area around the tires. Drive the machine forward.

If the machine is still stuck, remove more material from around the machine and tires. See the information for basic towing and pull the machine in a rearward direction.

NOTE: *When towing a machine that is stuck, monitor the amount of material that enters around the tires. To prevent the machine from being damage, remove material from around the tires as required.*

Do not tow the machine forward from a stuck position unless the machine is equipped with an approved tow cable. The tow cable is connected to a pin joint at the front of the rear frame.



Fig. 236

3.24.5 Towing a machine with a dead engine

If the machine has a dead engine, perform the following procedure before attempting to tow machine.

NOTE:
The following procedure will enable the machine to do six brake applications.
Charged accumulator units. The park brake valve is located behind the hydraulic tank on the left-hand side of the machine.

Procedure

1. Access to the red control lever, through the bottom panel (1). To remove the panel under the machine, remove the bolts.
2. Press the service brake pedal, and hold the service brake pedal for five seconds to release the park brake. Low accumulator pressure warning can come on.
3. Follow basic towing procedures for a stuck machine.
4. Park the machine after towing.

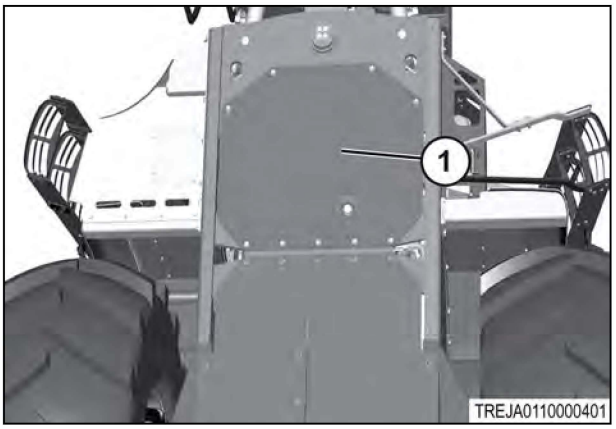

Fig. 237

5. When towing is completed, and the engine is started, the hydraulic pressure will reset the valve (1) to the original position.
6. If the machine has electrical power, turn the ignition key on, and put the transmission control in park position.
7. If the machine does not have electrical power, pull the manual lever to engage the park brake.

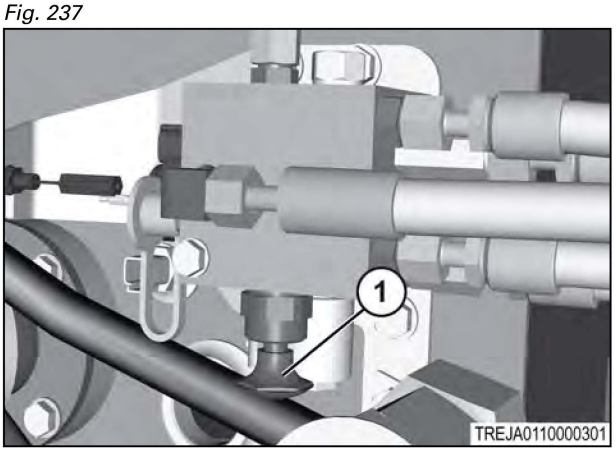

Fig. 238

3.24.6 Accumulator without pressure

If the service brake accumulator has no pressure, use a hand hydraulic pump with a pressure gauge and a quick-disconnect.

Procedure

1. Connect the quick-disconnect to the pressure tap (1) near the service brake accumulator.
2. Pressurize the accumulator to a minimum 22.4 bar (325 psi) and hold while towing the machine.
3. Attach the hand hydraulic pump to the machine. Follow the basic towing procedures for a stuck machine.

   When towing of the machine has been completed, release the pressure on the parking brake by turning the key to the accessory position.

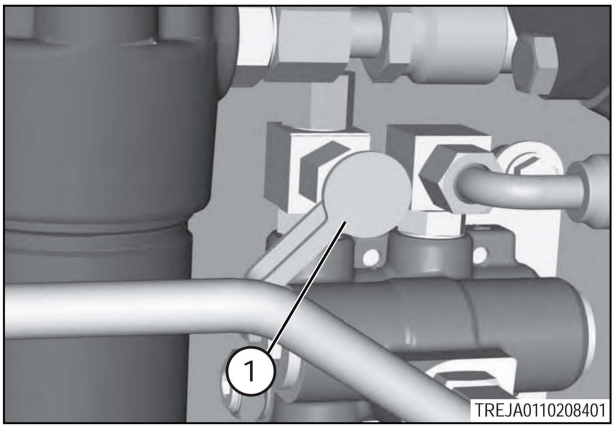

Fig. 239

4. If there is no electrical power, pull the manual lever left of the seat.

3.24.7 Transporting the machine

Procedure

1. Rotate down and secure radio antenna.
2. Cover the exhaust opening to prevent damage to the turbocharger.
3. Find the tie downs in the front and rear of machine, to fasten the machine to the truck or trailer.

3.25 3-point linkage

3.25.1 Connecting the implement to the 3-point linkage

Before connecting implements to three point hitch following items need to be checked:

Procedure

1. Adjust the sway blocks to a suitable position for the implement and for the application.
2. Remove the drawbar if the equipment mounted close to the machine can cause interference.
3. Adjust the draft sensitivity to control detent.
4. Position the machine so the draft arm hitch points are lined up with the implement hitch pins.
5. Put the machine into park and the stop the engine.
6. Attach the draft arms to the implement.
7. Adjust the top link until the ball end can be attached to the top pin on the implement. Adjust the top link to an initial setting of 724 mm.
8. Attach additional equipment. Implement hydraulics or PTO drive shaft can be additional equipment.

   IMPORTANT:
   Make sure that no interferences exist between machine and implement. Make sure that at least 100 mm (4 in) of clearance exists between implement and cab when raising hitch.
9. Check PTO driveshaft. Make sure that the following conditions are not present:
   - Driveshaft is extended too far.
   - Driveshaft is in a bottom condition.
   - Driveshaft is at an excessive angle while implement is raised or lowered.
   - Driveshaft contacts guard for PTO.
   - Driveshaft contacts drawbar

3.25.2 Disconnecting the implement from the 3-point linkage

Procedure

1. Set the implement on a level surface. Make sure the implement is correctly supported and will not fall when uncoupling the implement from the machine.
2. Put the machine into park and stop the engine.
3. Disconnect the implement hydraulics or remove the PTO driveshaft.
4. If necessary, adjust the length of the top link to remove any excess load on the implement hitch pin. Remove the implement hitch pin and store the center link in the upper position.
5. Remove the implement hitch pins from the draft arms.

3.25.3 Connecting the implement to the quick hitch

Procedure

1. Check the clearance between the quick hitch and the accessory hydraulic hoses.

2. Adjust the sway blocks (5) to a position necessary for the implement and for the application.

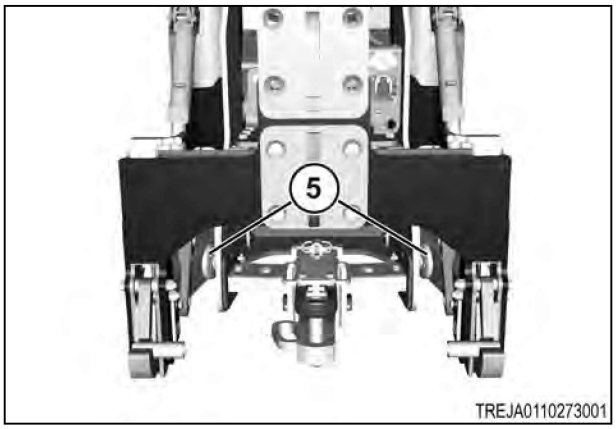

Fig. 240

3. Remove the drawbar (1) if the equipment is mounted near the machine that can cause interference.

4. Adjust the draft sensitivity to set the control detent.

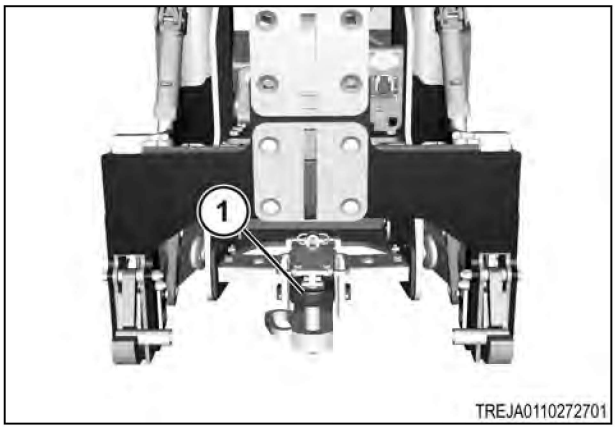

Fig. 241

5. Put the latch handles (2) in the down position.

6. Back the machine up to the implement. Make sure the lower hooks are below the pins on the implement and that the 3-point linkage frame is parallel to the implement.

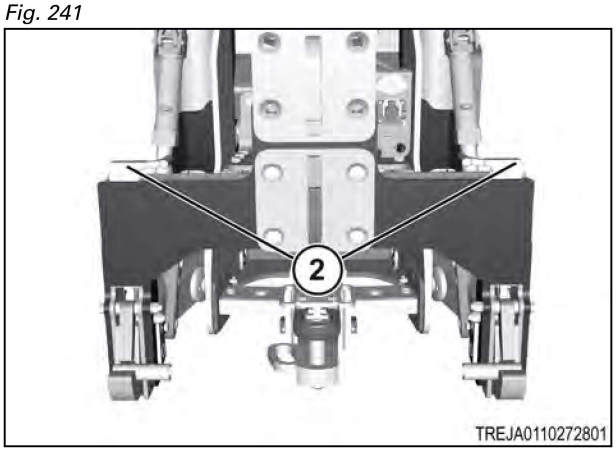

Fig. 242

7. Put the lower hooks (3) directly below the pins on the implement. Put the upper hook (4) below the center pin of the implement.

8. Raise the hitch slowly to lock on the implement. Make sure the lower latches and the center hook of the quick hitch fully engage the pins of the implement.

9. Fasten any auxiliary equipment. Auxiliary equipment includes implement hoses or the PTO drive shaft.

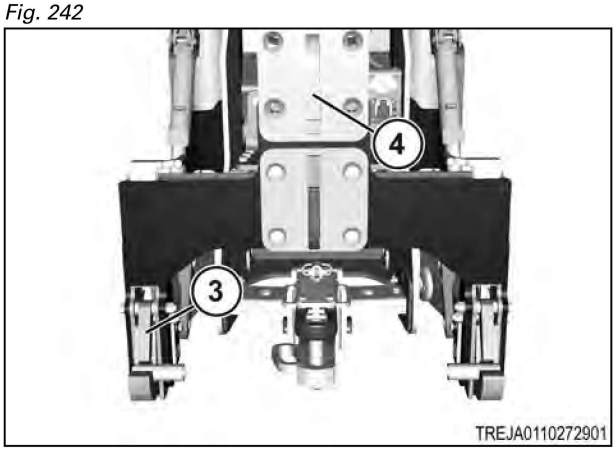

Fig. 243

3.25.4 Disconnecting the implement from the quick hitch

Procedure

1. Park the tractor and the implement on a solid, level surface. Stop the engine, apply the park brake, and take the key with you.
2. Correctly support the implement when disconnecting the implement from the machine.
3. Disconnect any hydraulic hoses and wiring harnesses from the tractor.
4. Put the latch handles (2) in the up position.
5. Lower the 3-point linkage until the hitch clears the pins on the implement.

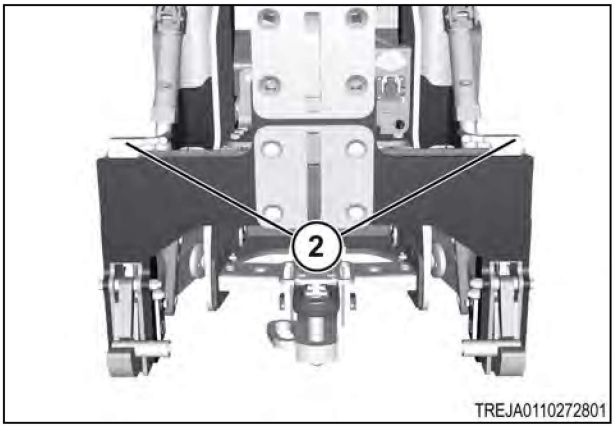

Fig. 244

3.25.5 Console controls

- (1) Hitch Depth Sensor
- (2) Raise/work switch
- (3) Throttle
- (4) Engine A/B
- (5) PTO
- (6) Roading lockout

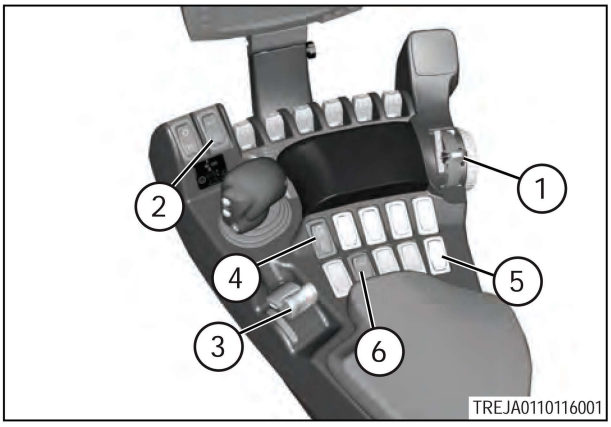

Fig. 245

3.25.6 3-point linkage

The machine utilizes an electro-hydraulic system to operate the 3-point linkage linkage. The hydraulic system is controlled by the electronic sensors, switches and the machine ECM.

WARNING:
Movement of the 3-point linkage and the implements can cause personal injury. Before operating the 3-point linkage, make sure that no person or object is near the implement or the hitch.

WARNING:
Accidental lowering of the 3-point linkage while roading, can damage road surface and implement, and cause an accident resulting in personal injury. When transporting the 3-point linkage mounted equipment, raise the implement by placing the 3-point linkage control lever in fully rearward position. Set the adjustable stop against the front edge of the lever to help prevent accidental forward lever movement. Set the 3-point linkage raise/work switch to the raise position. Actuate the roading lockout switch as an additional transport position safeguard.

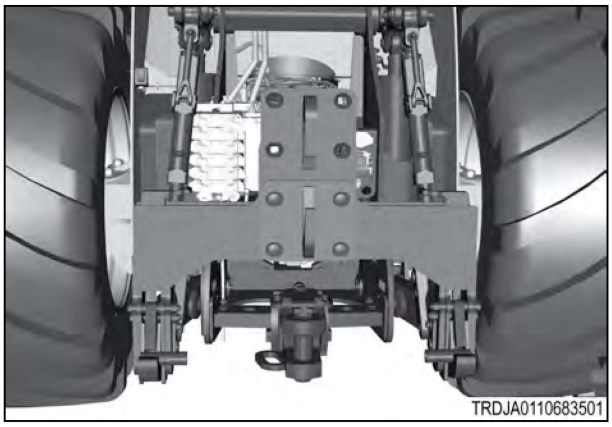

Fig. 246

3.25.7 Adjusting the 3-point linkage control lever

The height of the implement and the depth of the implement are controlled by the 3-point linkage control lever (1).

Procedure

1. Pull the 3-point linkage control lever to the rear to raise the 3-point linkage.

2. Push the 3-point linkage control lever forward to lower the 3-point linkage.

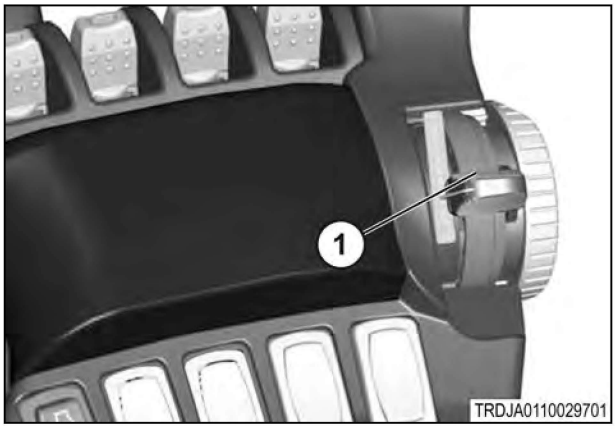

Fig. 247

3. Adjust the depth stop by lifting the lever (1) and rotating the outer dial (2) to the desired setting.

NOTE:
The adjustable depth stop is located on the 3-point linkage control, and limits the lever travel.

4. Release the lever to lock the dial in position.

5. To bypass the depth stop temporarily, push the 3-point linkage control lever (3) with additional force to move around the resistance of the stop.

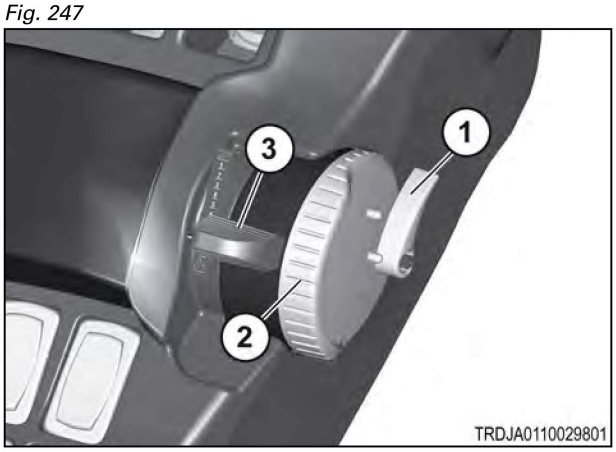

Fig. 248

3.25.8 Raise/lower switch for the 3-point linkage

Raise/lower switch (1) for the 3-point linkage lets the operator quickly raise the implement to a position set by the parameter for the raise limit. The switch lets the operator lower the implement to the position set by the 3-point linkage control lever. Pressing the front of the switch lowers the implement, and pressing the rear of the switch raises the implement.

IMPORTANT:
Press the back of the raise/lower switch to raise the 3-point linkage. Activate the roading lockout switch before transporting the equipment.

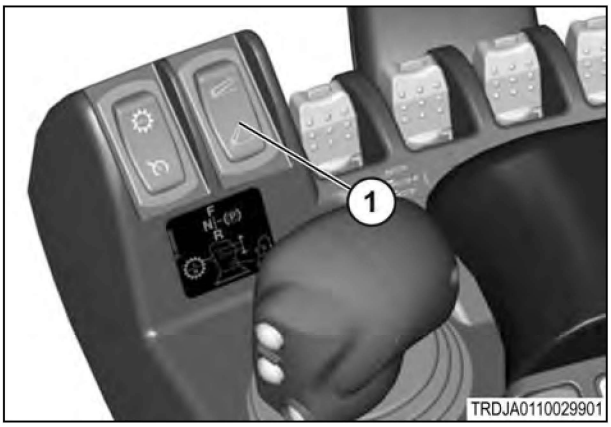

Fig. 249

3.25.9 External 3-point linkage switch

WARNING:
Clearance in the 3-point linkage area increases and decreases with the movement of the linkage. To prevent injury, do not stand on or near the implement. When anyone is operating the external 3-point linkage position control switches do not stand between implement and machine. When moving to the opposite side of machine, move around machine or implement to prevent entering linkage area.

The external raise/lower switch is installed to assist operator in connecting an implement. The operator can lower and raise the 3-point linkage at a reduced speed. The speed is not adjustable. The switch is on the left-hand side rear fender. The switch, when released, resets to the off position.

The 3-point linkage can be raised past the raise limit that was set by the operator. The 3-point linkage can be lowered below the position of the 3-point linkage control lever.

NOTE:
Using the external switch will cause the 3-point linkage to move at a slower rate than using controls in the cab.

Procedure

1. Press and hold the bottom of the switch to lower the 3-point linkage.
2. Press and hold the top of the switch to raise the 3-point linkage.
3. To use the external position control switch, the following conditions must be present:
   - Transmission control lever is in the park position.
   - PTO is disengaged.
   - Calibration mode is not selected.

   NOTE:
   Using the external raise/lower switch will cause the 3-point linkage to not be captured.

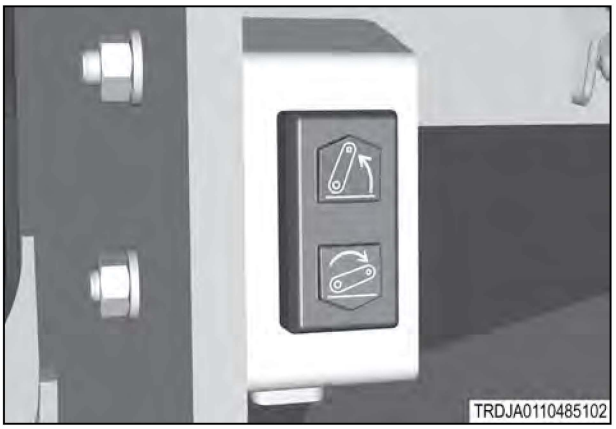

Fig. 250

3.25.10 Implement leveling

The 3-Point linkage on this machine will receive implements that agree to the following standards:

- Category III/IVN

- Category IV (optional)

Adjustments can be made to the 3-point linkage linkage to let the operational requirements of different implements.

3.25.11 Adjusting the top link

The top link (1) adjusts the fore/aft pitch of the implement relative to the machine.

Procedure

Remove the spring clip (2)from the handle. Raise the handle to the vertical position on the top link (1)

The starting work range for the top link is 635 mm (25.0 in) to 785 mm (30.9 in). Adjust the top link as necessary.

Fasten the adjustment handle with the spring clip.

NOTE:
If necessary, a wrench can be installed on flats of top link to assist with the adjustment. A spring pin that is located on the top link prevents the top link from becoming extended too far.

.

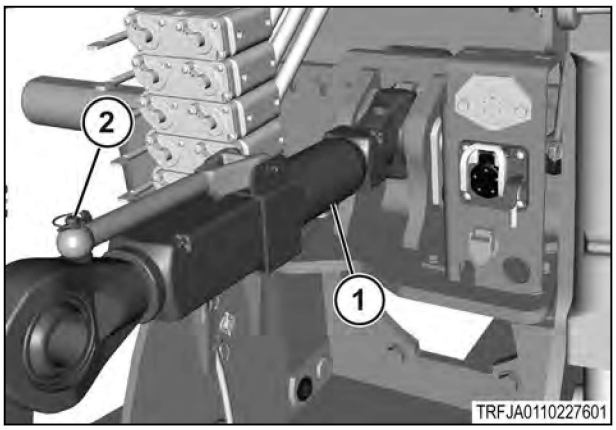

Fig. 251

3.25.12 Adjusting the draft arm

The draft arms will float with the contour of the ground to increase the capacity of the implement to follow uneven terrain. When possible, use the float for the draft arms.

Procedure

1. Install the pin into the hole (1) to prevent the float.
2. Remove the pin from the hole (2) to permit the draft arms to float.
3. Store the pin in the hole (3).

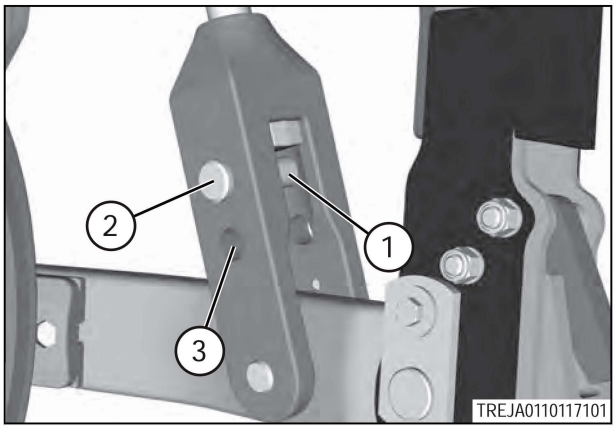

Fig. 252

3.25.13 Lift linkages and quick hitch

NOTE:
Lubricate the linkages by using molybdenum additive grease.

Lubricate the grease fittings at every 10 service hour intervals in the following conditions:

- Very wet conditions
- Very muddy conditions

- Very dusty conditions

Procedure

1. Two grease fittings are located on each lift link (1).

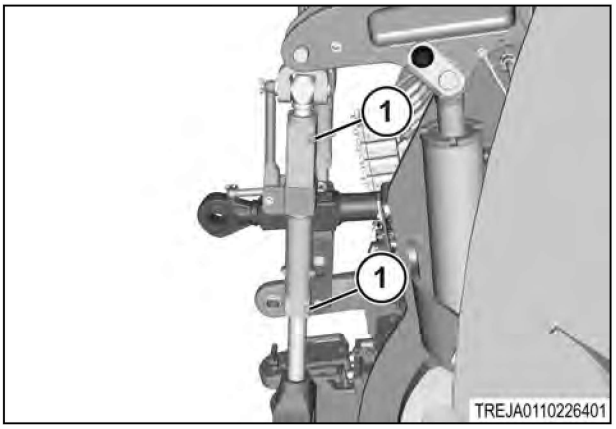

Fig. 253

2. Two grease fittings are located on adjusting sleeve for top link (2).

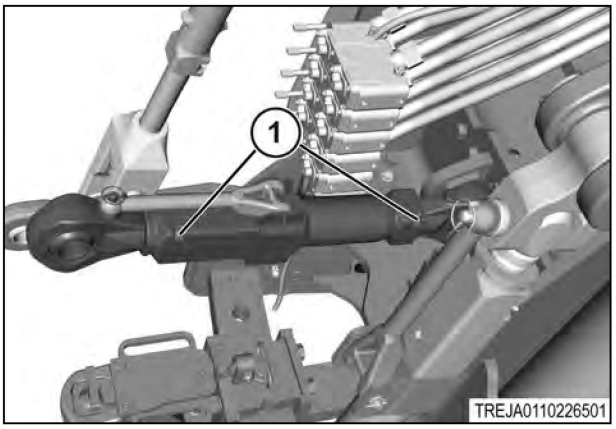

Fig. 254

3.25.14 Setting the 3-point linkage side sway

Procedure

1. **No 3-point linkage side sway.** To prevent 3-point linkage from swaying, insert pin (1) through hole in sway limiters. Use provided lynch pins to fasten pins.

2. **Full 3-point linkage Side Sway** - to use the full 3-point linkage side sway, use the following procedure:

   - Remove lynch pin (1)
   - The hole in the sway limiter (2) must be aligned with the hole in the drawbar cage.

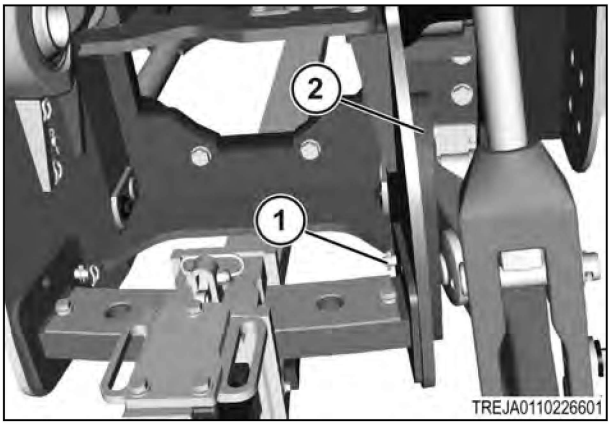

Fig. 255

3. Insert pin (1) through hole (4).

Permitting implement to sway is very helpful when turning tractor with a load on draft arms. When possible, let the 3-point linkage use the full 3-point linkage side sway.

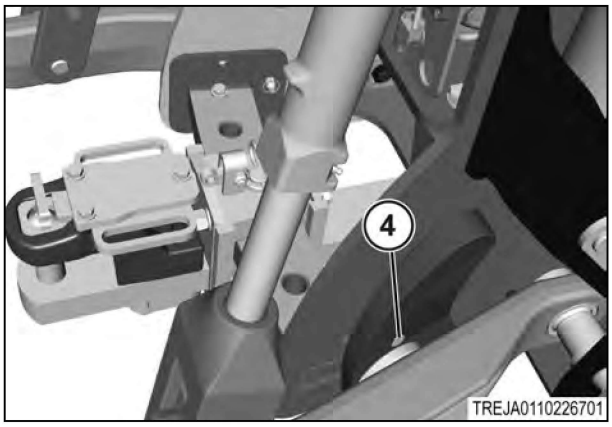

Fig. 256

3.26 Drawbar

3.26.1 Drawbar

WARNING: *The drawbar can move unexpectedly if not correctly restrained, when transporting equipment. Possible unstable operation of towed implement can cause an accident and result in personal injury. Always install drawbar lock assemblies to prevent drawbar swing when transporting equipment.*

WARNING:
Bystanders can become caught between machine and implement when the operator is backing machine to connect to an implement. Personal injury or death can result. Do not hold the drawbar or insert the hitch pin while the machine is being attached to the equipment. Always engage the parking brake and stop the engine before inserting the hitch pin. Make sure that the surrounding area is free of any personnel before maneuvering to connect an implement.

The drawbar (1) can be connected to an implement by removing the drawbar pin. See connecting category four drawbar implements.

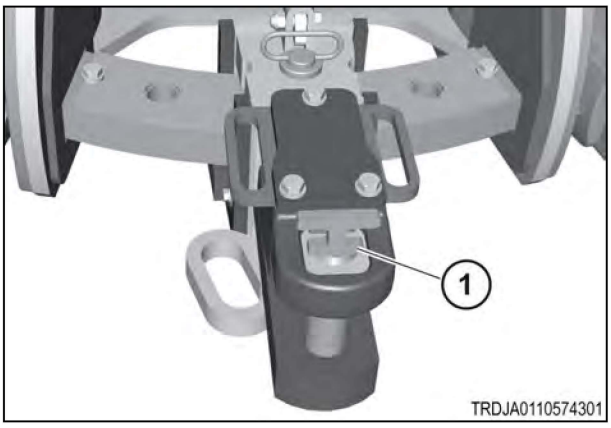

Fig. 257

NOTE:
Rotate the drawbar pin by 180° when connecting an implement, which will let the drawbar pin to wear evenly.

WARNING:
The tractor stopping distance increases when towing heavy equipment. Do not transport faster than (32 km/h)((19.9 mph)) *when towing equipment that is not equipped with brakes. Do not tow equipment that weighs more than one and a half times the weight of the tractor, unless functional trailer brakes are installed on the towed equipment. Failure to comply may lead to accident and personal injury.*

WARNING:
A severely unbalanced machine will become unstable during braking. Reduce speed and use extra caution when roading a machine with mounted equipment. Failure to comply may lead to accident and personal injury.

3.26.2 Connecting drawbar implements

NOTE:
Install a safety chain between the machine and the implement. See the information for installing the safety chain.

Adjust the retaining pin on the drawbar support (1) to connect the drawbar in a fixed position for:

- Towing implements
- Using the power take-off

Let the drawbar swing when pulling ground engaging equipment. On standard drawbar, remove retaining pins.

Adjust the implement at the correct height to permit the drawbar to connect correctly.

Procedure

1. To remove the drawbar pin (2), pull the handles (3) rearward on the spring loaded plate to unlock the drawbar pin. Lift up and remove the drawbar pin.

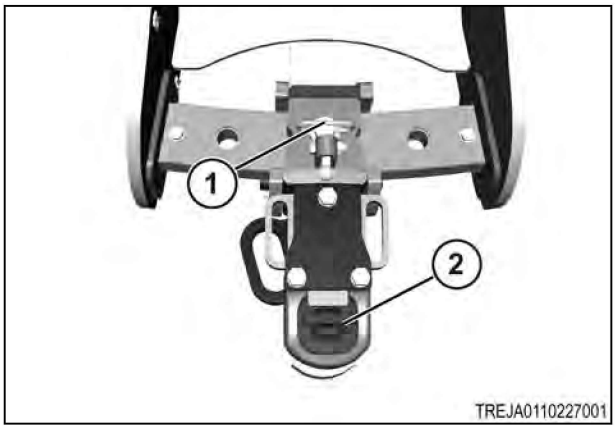

Fig. 258

2. Slowly inch the machine in the rearward direction until the tongue of implement contacts the drawbar.
3. Engage the park brake.
4. Insert the drawbar pin.

   A hole is located on the bottom of the drawbar pin. A lynch pin can be inserted in this hole to lock the drawbar in position.

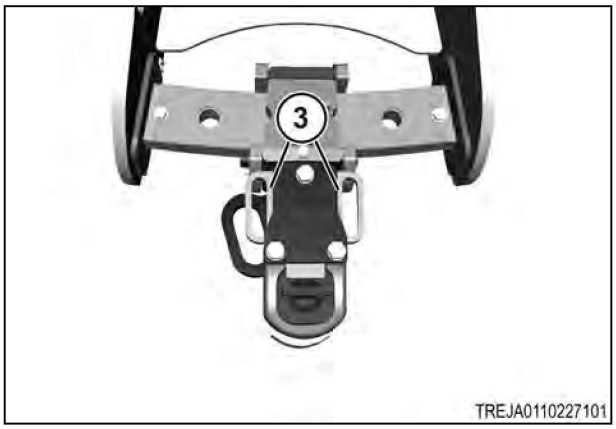

Fig. 259

3.26.3 Safety chain

When towing implements on the highway, use a safety chain. Minimum tensile strength for the safety chain must be at least equal to the gross weight of the implement.

The safety chain will control the implement if the drawbar becomes disconnected from the implement.

Route the safety chain by going under the intermediate support (1), and over. Secure around the lower plate of the drawbar support (2).

Check the adjustment of the safety chain by driving the machine. Turn the machine in both directions to make sure the chain does not bind.

NOTE: *If necessary, adjust to remove a chain that is too tight or too loose.*

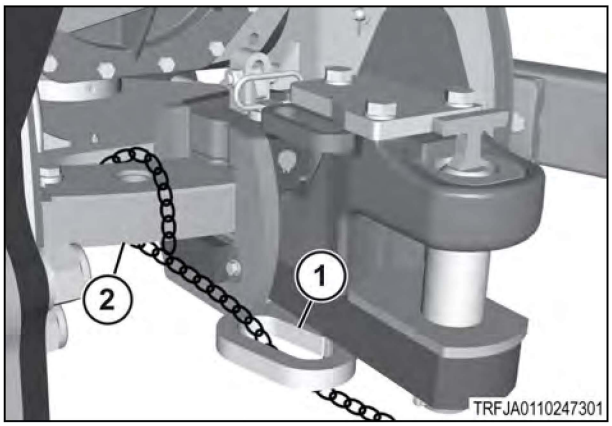

Fig. 260

3.26.4 Adjusting the drawbar position

Procedure

Lift the latch (1) to remove the retaining pin. The drawbar can now swing full width of the support. Some applications require fastening the drawbar in a fixed position. When pulling ground engaging equipment, remove the retaining pin (2), this lets the drawbar swing when turning the machine. Removing the retaining pin also improves the performance of the steering system when the machine is under load. Make sure the retaining pin (2) is installed when roading equipment.

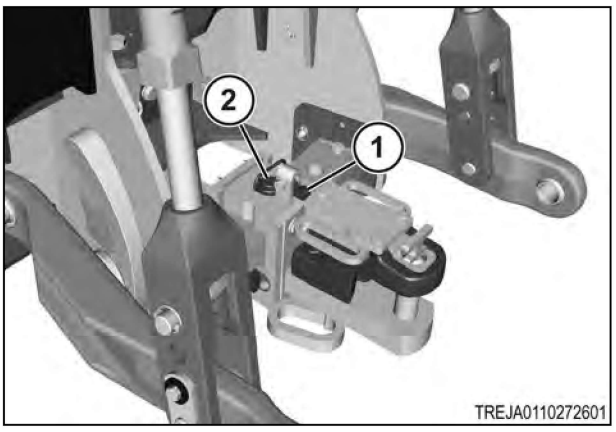

Fig. 261

3.26.5 Replacing the wear plates and the rubber stops on the standard drawbar

Standard drawbar

Procedure

1. There are two replaceable rubber stops (1) on each side of the standard drawbar.
2. There is a total of two bolts and two washers (2) to remove the rubber stops.

   There is also a wear plate (3) that the drawbar slides on.

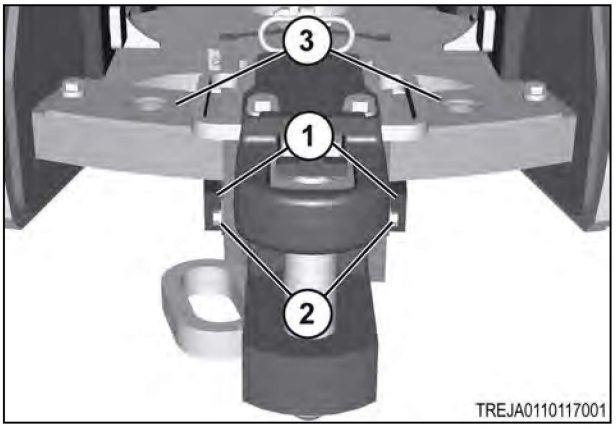

Fig. 262

3. Remove the screws (1) and replace the wear plate as needed.

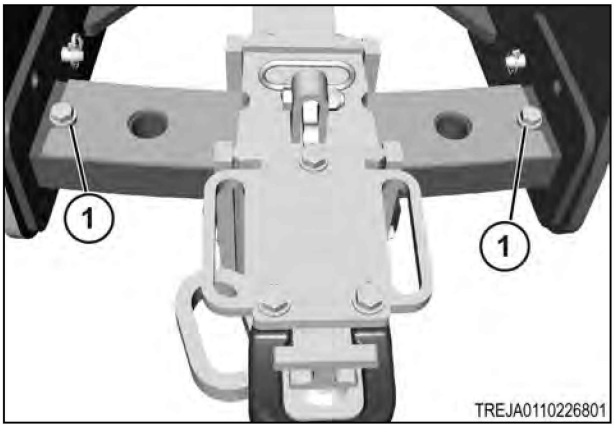

Fig. 263

3.27 Implement drive system

3.27.1 Operating the power take-off

Procedure

1. To engage the power take-off (PTO), reduce the engine speed to low idle (approximately 1000 rpm).

2. Press down on the yellow button (1) in the center of the PTO switch and push forward to start PTO operation.

NOTE:
The engaging of the PTO is modulated by the tractor electronics.

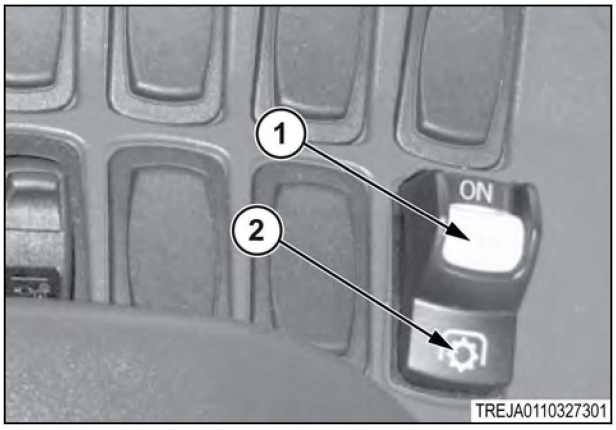

Fig. 264

3. Monitor the power take-off equipment during start up to make sure of the correct operation.

4. If a problem occurs, immediately stop the PTO by pressing the rear of the PTO switch(2).

5. Correct the problem before starting the PTO again.

6. Gradually increase the engine speed until the desired operating speed of the PTO is reached.

NOTE:
The PTO speed can be read directly from the display terminal or the indicator scale on the instrument panel cluster (1000 RPM PTO speed is reached at 1980 engine RPM).

7. To operate the machine while stationary:
a) Engage the lock at the articulation joint.
b) When leaving the cab, the alarm will sound and a warning will display on the machine management center.
c) The PTO will continue to run.

8. To disengage the PTO, press the rear of the PTO switch (2).

IMPORTANT:
When possible, reduce the engine speed to low idle (approximately 1000 RPM) before disengaging the PTO. Doing so will extend the life of the PTO driveline brake.

IMPORTANT:
Disengage the PTO before making sharp turns, to reduce possible driveline damage.

3.27.2 Power take-off shaft

The machine is equipped with a 45 mm (1.75 in) 20 spline power take-off (PTO) Shaft.

Make sure the PTO shield (1) is in position before operating PTO.

NOTE:
To protect a PTO driven implement from high torques in a stalled or overloaded condition, it is recommended implement be equipped with a torque limiting device.

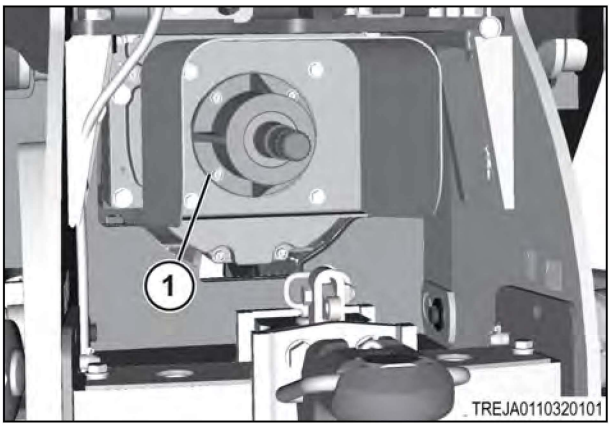

Fig. 265

3.27.3 Connecting the power take-off implements

Procedure

1. Adjust the drawbar correctly, and make sure the swing locks are in position before connecting.
   For three point implements, adjust the sway blocks so there is no side sway.
2. Fasten the implement to the machine.
3. Stop the engine.
4. Fasten the implement drive shaft to the machine, and make sure the locking device is engaged.
5. Check the clearance between the drive shaft and the top of the drawbar clevis and the drawbar pin.

   NOTE:
   Clearance must be sufficient to prevent contact with the drawbar clevis during machine operation.
6. If necessary, remove the clevis and change the drawbar mounted implement as necessary to reattach correctly to the drawbar.

   NOTE:
   Some implements require the clevis be removed to use PTO.

   NOTE:

   Make sure the PTO cannot have the following conditions:

   - PTO shaft must not become extended too far.
   - PTO shaft must not reach the end of travel.
   - PTO shaft must not reach an excessive angle while the operating machine.

   NOTE:
   A PTO shaft is extended too far when the shaft is within 152 mm (6 in) of uncoupling.

   NOTE:
   A PTO shaft bottoms out when the drive shaft is within 25.4 mm (1 in) of the collapsed length of the drive shaft.

3.28 Ballasting

3.28.1 Ballasting guide lines

To get best performance, ride comfort and long tire life, machine must be ballasted and the tire pressure set correctly. Use guidelines in this section to determine correct ballast configuration.

3.28.2 General guide lines

IMPORTANT: *Additional ballast may be required for proper balance with PTO and/or 3 point hitch options installed. Maximum laden weight must not be more than 27216 kg (60000 lbs).*

- Set and keep the machine balance, ballast and tire pressures per recommendations in this section. A ballasting worksheet is provided for this purpose. For reference, an example is provided. See the information under Heavy vertical hitch loads for tire pressure adjustments if pulling 3-point linkage equipment, scraper pans or the other implements transmitting vertical hitch loads to machine.
- Liquid tire ballast is not recommended. Always use cast iron wheel weights and/or front suitcase weights for ballasting.
- The recommended operating weight is 45 kg to 54 kg to (99 to 119 lb) per engine kiloWatt kW/kg (horsepower hp/lb). Higher speeds and lighter draft loads demand less weight per kW (hp) and can be possible to reduce machine ballast.
- A correctly balanced and ballasted machine, operating with correct tire pressures must have tire slip in range of 6 to 12 percent when operating under load. This amount of slip is normal and necessary to cause correct drawbar kiloWatt (horsepower).
- Do not try to operate at full or heavy loads below 6.4 km/h (4 mph). Continued operation below this speed shortens the powertrain life. Never operate above maximum ballasted weight for machine model.

3.28.3 Tire pressure

The effects of over inflation include:

- Rough ride
- Reduced fuel economy
- Increased tire wear because of excessive wheel slip
- Not good enough power hop control
- Reduced drawbar hp

The effects of under inflation include:

- Reduced tire life because of excessive sidewall bending
- Increased chance of tire damage and tire to wheel slip
- Increased rolling resistance

Never fill past the maximum rated pressure told on the tire sidewall.

Set all tires on the same axle to the same pressure.

Do not operate with radial tires below 41 kPa (5.9 psi) minimum pressure.

When operating on side hill conditions, increase tire pressure by 28 kPa (4 psi) to adjust for side-to-side weight transfer.

3.28.4 Power hop control

Power hop is loss of traction when a machine pulls an implement at medium to high draft load in loose, dry soil or up hill.

Setting all the tires to the correct air pressure for the axle load usually corrects most of the power hop issues. If power hop occurs again after the tire pressures are corrected, do the following procedure:

1. Adjust the weight split front to rear can help decrease power hop.
2. Make sure the machine is balanced per guidelines in table two (see the information for ballast recommendations) and weight/hp is minimum 48 kg/HP. Adjust the ballast if necessary and set all the tires to the recommended pressures. See the information on heavy vertical hitch loads for additional tire pressure information.
3. Test the machine again for power hop. If power hop occurs, increase the pressure in all rear tires by 41 kPa (6 psi) and test again.
4. Continue to increase the rear tire pressure 41 kPa (6 psi) at a time, until there is no power hop or at the maximum tire pressure.

3.28.5 Ballasting recommendations for the special application machine

Ballasting the machine correctly will be crucial to get optimal performance. There are factors to consider when selecting the correct weight to add to the machine:

- Machine horsepower
- Scraper size being used
- Terrain
- Soil conditions

Machine base weight	
Tire option	**Weight**
620/70R46, 650/85R38, 710/70R38 Duals	Approximately 20 865 kg (46 000 lb)
710/70R42 and 800/70R38 Duals	Approximately 21 546 kg (47 500 lb)
1100/45R46 Single tire	Approximately 19 550 kg (43 100 lb)
35.5L-32 Single tire	Approximately 18 733 kg (41 300 lb)

The machine must be ballasted up to its maximum permitted weight to get maximum performance.

Machine maximum ballasted weight	
MT955E	24 494 kg (54 000 lb)
MT965E	27 216 kg (60 000 lb)
MT975E	27 216 kg (60 000 lb)

Ballasting will be achieved with a combination of the weights mounted on the wheels of the machine and the front mounted suitcase weights. The other major factor to consider is the tire air pressure. Having the correct weight on the machine will not produce ideal performance if the tires are incorrectly inflated.

3.28.6 Weight splits

It is recommended that all special application machines be configured in a 65 Front / 35 Rear weight split. This is required due to extreme load transfers in scraper applications. When under load and hauling, this weight split will create optimum traction by bringing the entire machine-scraper system to an even weight split.

3.28.7 Ballasting packages

The weight options detailed below weights the machine to its maximum allowable weight.

MT955E

Tire option	Ballasting weight	Total weight
620/70R46, 650/85R38 and 710/70R38 Duals	6 Total Weights on Rear Axle 1361 kg (3000 lb) 6 Total Weights on Front Axle 1361 kg (3000 lb) 20 Front Weights 1422 kg (3137 lb)	24494 kg (54000 lb)
710/70R42, 800/70R38 and IF800/70R38 Duals	4 Total Weights on Rear Axle 907 kg (2000 lb) 4 Total Weights on Front Axle 907 kg (2000 lb) 20 Front Weights 1422 kg (3137 lb)	24494 kg (54000 lb)
35.5L-32 Single Tire	6 Total Weights on Rear Axle 2177 kg (4800 lb) 6 Total Weights on Front Axle 2177 kg (4800 lb) 20 Front Weights 1422 kg (3137 lb)	24494 kg (54000 lb)
1100/45R46 Single Tire	6 Total Weights on Rear Axle 1361 kg (3000 lb) 6 Total Weights on Front Axle 1361 kg (3000 lb) 32 Front Weights 1976 kg (4356 lb)	24494 kg (54000 lb)

MT965E and MT975E

Tire option	Ballasting weight	Total weight
620/70R46, 650/85R38, 710/70R38 and 710/70R42 Duals	10 Total Weights on Front Axle 2268 kg (5000 lb) 8 Total Weights on Rear Axle 1814 kg (4000 lb) 32 Front Weights 1976 kg (4356 lb)	27216 kg (60000 lb)
800/70R38 and IF800/70R38 Duals	8 Total Weights on Rear Axle 1814 kg (4000 lb) 8 Total Weights on Front Axle 1814 kg (4000 lb) 32 Front Weights 1976 kg (4356 lb)	27216 kg (60000 lb)
35.5L-32 Single Tire	8 Total Weights on Rear Axle 2903 kg (6400 lb) 8 Total Weights on Front Axle 2903 kg (6400 lb) 32 Front Weights 1976 kg (4356 lb)	27216 kg (60000 lb)
1100/45R46 Single Tire	10 Total Weights on Rear Axle 2268 kg (5000 lb) 10 Total Weights on Front Axle 2268 kg (5000 lb) 32 Front Weights 1976 kg (4356 lb)	27216 kg (60000 lb)

3.28.8 Heavy vertical hitch loads

Adjustments to the rear tire pressures are required to support any additional axle loads that are generated by heavy rear-mounted implements. Other loads can include 3-point linkage equipment (not available), scraper pans and grain carts. Because of the variations in equipment and loads, best method to determine correct rear tire pressures is to:

1. Measure the rear axle weight with a scale while the heavy hitch load is supported by the machine.
2. See the information on the tire inflation guide to determine the correct rear tire pressure, based on the measured axle weight.

An alternate method is to measure the amount of rear tire deflection. This method is not as accurate but can be used if measuring the rear axle weight is not possible Use the following procedure for this method:

1. Park the machine on a level surface and then support the mounted equipment at the equipment's maximum operating weight.
2. Measure (1) the distance between the center of the hole (2) and the ground (3).
3. Determine the height measurement reference for the tires installed on machine by using the tire inflation guide. Compare the value to the measurement taken in Step 2. If the reference and the actual measurements are not within 6.4 mm, adjust the pressure in all the rear tires by 4 psi and repeat Steps 2 and 3. Do not go higher than the maximum tire pressure recorded on the tire sidewall.

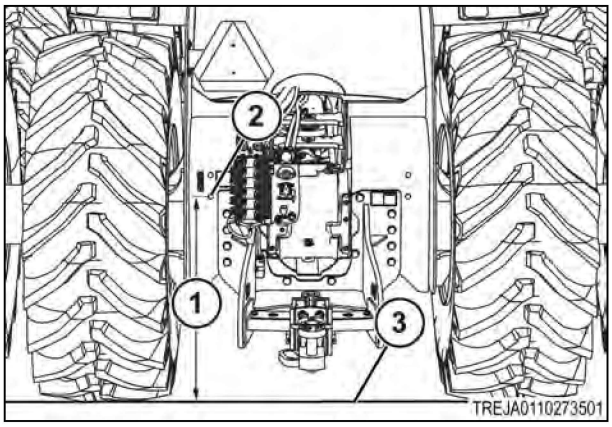

Fig. 266

3.28.9 Ballasting work sheet

MT900 Ballasting worksheet

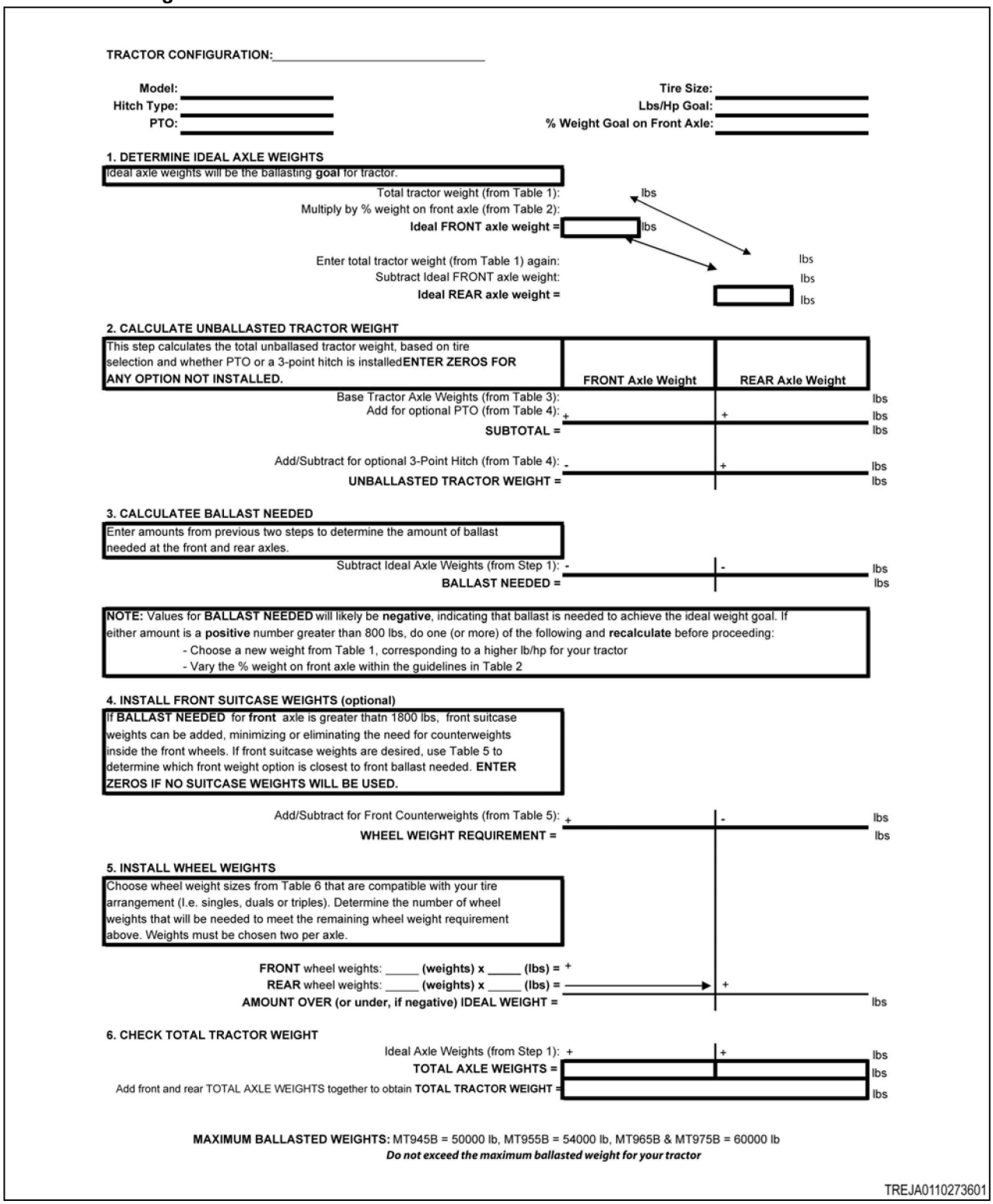

Fig. 267

Table 1

Machine weight guidelines			
	MT955E	MT965E	MT975E
	(500 hp)	(550 hp)	(600 hp)
100 lb/hp	46000	51000	57000
105 lb/hp	48300	53550	59850
110 lb/hp	50600	56100	60000
115 lb/hp	52900	58650	60000
120 lb/hp	54000	60000	60000

Table 2

Percent weight on front axle		
Drawbar only	three-point linkage	Towed scraper
55-60 percent	60-70 percent	65-70 percent

Table 3

MT900E Base machine axle weights		
Tire and wheel arrangements	Front	Rear
620/70R42 Duals	35282	17456
620/70R46 Duals	35517	17493
650/85R38 Duals	35489	17553
710/70R38 Duals	35452	17541
710/70R42 Duals	35829	17887
800/70R38 Duals	36171	18698
IF800/70R38 Duals	36378	18491
480/80R46 Triples	36226	18331
480/80R50 Triples	36929	19024
520/85R42 Triples	36287	18362
520/85R46 Triples	36916	19004
35.5-32LS Singles	33721	15796
1100/45R46 Singles	34649	16683

Table 4

Machine options	Front	Rear
PTO - add	+228	+722
Three-point linkage - add/subtract	-405	+2904

Table 5

Front counterweights	Front	Rear
Front bracket only	+1738	-672
Bracket +20 suitcase weights	+5167	-2030
Bracket +32 suitcase weights	+7202	-2846

Table 6

Wheel weights	Front and rear axle
Duals/Triples - add	500 lb each
Singles - add	800 lb each

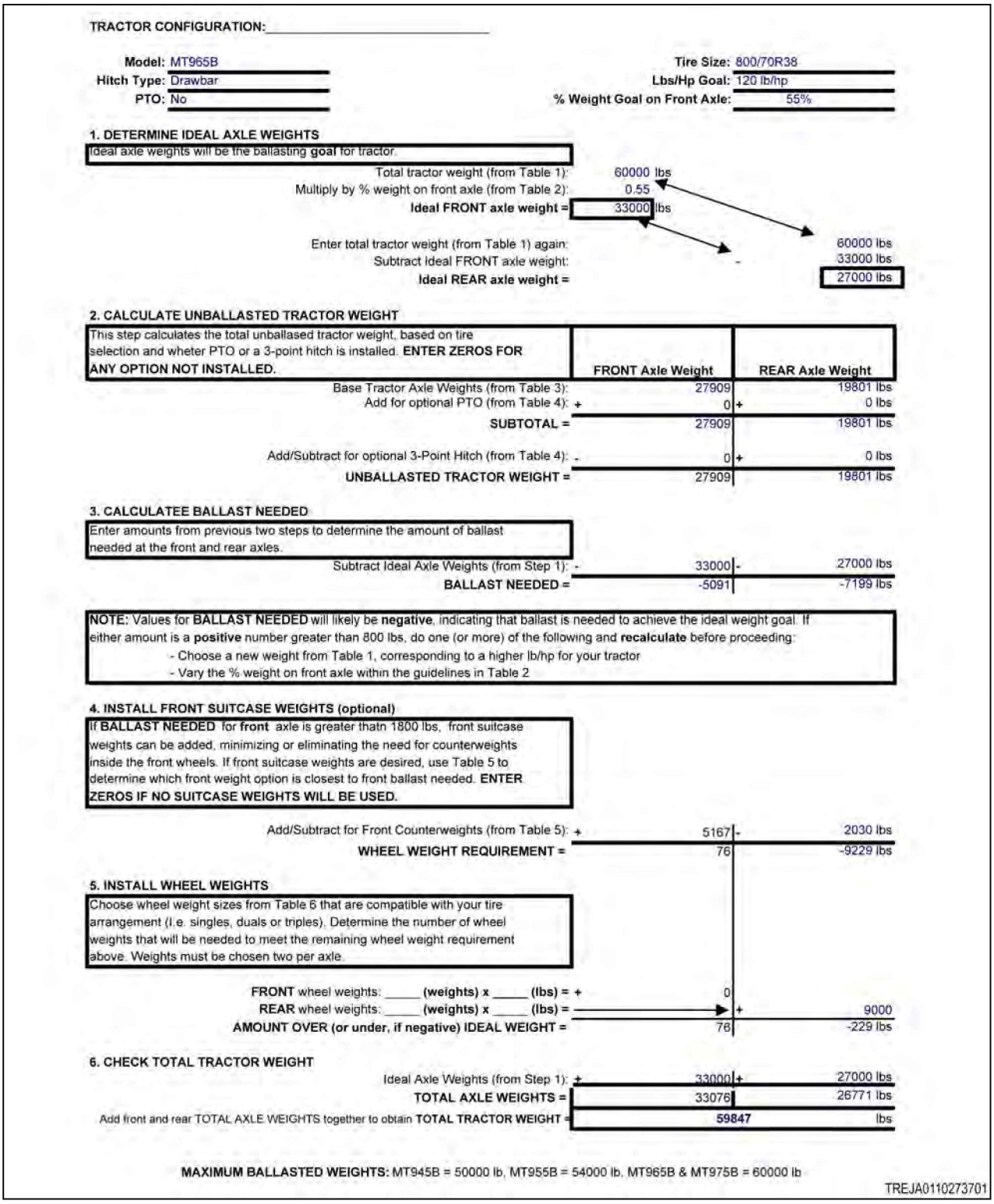

TRACTOR CONFIGURATION:

Model:	MT965B	Tire Size:	800/70R38
Hitch Type:	Drawbar	Lbs/Hp Goal:	120 lb/hp
PTO:	No	% Weight Goal on Front Axle:	55%

1. DETERMINE IDEAL AXLE WEIGHTS

Ideal axle weights will be the ballasting **goal** for tractor.

Total tractor weight (from Table 1):	60000 lbs	
Multiply by % weight on front axle (from Table 2):	0.55	
Ideal FRONT axle weight =	33000 lbs	
Enter total tractor weight (from Table 1) again:		60000 lbs
Subtract Ideal FRONT axle weight:		- 33000 lbs
Ideal REAR axle weight =		27000 lbs

2. CALCULATE UNBALLASTED TRACTOR WEIGHT

This step calculates the total unballased tractor weight, based on tire selection and wheter PTO or a 3-point hitch is installed. **ENTER ZEROS FOR ANY OPTION NOT INSTALLED.**

	FRONT Axle Weight	REAR Axle Weight
Base Tractor Axle Weights (from Table 3):	27909	19801 lbs
Add for optional PTO (from Table 4): +	0 +	0 lbs
SUBTOTAL =	27909	19801 lbs
Add/Subtract for optional 3-Point Hitch (from Table 4): -	0 +	0 lbs
UNBALLASTED TRACTOR WEIGHT =	27909	19801 lbs

3. CALCULATEE BALLAST NEEDED

Enter amounts from previous two steps to determine the amount of ballast needed at the front and rear axles.

Subtract Ideal Axle Weights (from Step 1): -	33000 -	27000 lbs
BALLAST NEEDED =	-5091	-7199 lbs

NOTE: Values for **BALLAST NEEDED** will likely be **negative**, indicating that ballast is needed to achieve the ideal weight goal. If either amount is a **positive** number greater than 800 lbs, do one (or more) of the following and **recalculate** before proceeding:

- Choose a new weight from Table 1, corresponding to a higher lb/hp for your tractor
- Vary the % weight on front axle within the guidelines in Table 2

4. INSTALL FRONT SUITCASE WEIGHTS (optional)

If **BALLAST NEEDED** for **front** axle is greater thatn 1800 lbs, front suitcase weights can be added, minimizing or eliminating the need for counterweights inside the front wheels. If front suitcase weights are desired, use Table 5 to determine which front weight option is closest to front ballast needed. **ENTER ZEROS IF NO SUITCASE WEIGHTS WILL BE USED.**

Add/Subtract for Front Counterweights (from Table 5): +	5167 -	2030 lbs
WHEEL WEIGHT REQUIREMENT =	76	-9229 lbs

5. INSTALL WHEEL WEIGHTS

Choose wheel weight sizes from Table 6 that are compatible with your tire arrangement (i.e. singles, duals or triples). Determine the number of wheel weights that will be needed to meet the remaining wheel weight requirement above. Weights must be chosen two per axle.

FRONT wheel weights: _____ **(weights) x** _____ **(lbs) =** +	0	
REAR wheel weights: _____ **(weights) x** _____ **(lbs) =**	→	+ 9000
AMOUNT OVER (or under, if negative) IDEAL WEIGHT =	76	-229 lbs

6. CHECK TOTAL TRACTOR WEIGHT

Ideal Axle Weights (from Step 1): +	33000 +	27000 lbs
TOTAL AXLE WEIGHTS =	33076	26771 lbs
Add front and rear TOTAL AXLE WEIGHTS together to obtain **TOTAL TRACTOR WEIGHT =**	**59847**	lbs

MAXIMUM BALLASTED WEIGHTS: MT945B = 50000 lb, MT955B = 54000 lb, MT965B & MT975B = 60000 lb

TREJA0110273701

Fig. 268

3.28.10 Tire inflation guide

IMPORTANT: *Do not exceed the manufacturer's maximum inflation value stamped on the tire sidewall.*

NOTE: *Recommended tire pressure for 35.5L-32 24PR tires used in scraper applications is a minimum of 30 psi (207 kPa) front and rear. Severe conditions and/or pans 18 m (20 yd) or larger may require a maximum of 35 psi (241 kPa).*

Dual tires

Axle Weight (lbs)	620/70 R46 LI 162 Duals	650/85 R38 LI 173 Duals	710/70 R38 LI 166 Duals	710/70 R42 LI 173 Duals	800/70 R38 LI 173 Duals	IF800/70 R38 (axioBib) LI 179 Duals
18000	7	6	6	6	6	6
18500	8	6	6	6	6	6
19000	8	6	6	6	6	6
19500	8	6	6	6	6	6
20000	9	6	7	7	6	6
20500	9	7	7	7	6	6
21000	10	7	8	7	6	6
21500	10	7	8	8	6	6
22000	11	8	8	8	6	6
22500	11	8	9	8	6	6
23000	11	8	9	9	6	6
23500	12	9	9	9	7	6
24000	12	9	10	10	7	6
24500	13	10	10	10	7	6
25000	13	10	11	10	8	6
25500	14	10	11	11	8	6
26000	14	11	11	11	8	6
26500	14	11	12	11	9	6
27000	15	11	12	12	9	6
27500	15	12	13	12	9	6
28000	16	12	13	12	9	6
28500	16	13	13	13	10	7
29000	17	13	14	13	10	7
29500	17	13	14	13	10	7
30000	17	14	15	14	11	7
30500	18	14	15	14	11	8
31000	18	15	15	14	11	8
31500	19	15	16	15	12	8
32000	19	15	16	15	12	9
32500	20	16	16	16	12	9
33000	20	16	17	16	13	9
33500	20	16	17	16	13	9
34000	21	17	18	17	13	10
34500	21	17	18	17	13	10
35000	22	18	18	17	14	10

Axle Weight (lbs)	620/70 R46 LI 162 Duals	650/85 R38 LI 173 Duals	710/70 R38 LI 166 Duals	710/70 R42 LI 173 Duals	800/70 R38 LI 173 Duals	IF800/70 R38 (axioBib) LI 179 Duals
35500	22	18	19	18	14	10
36000	23	18	19	18	14	11
36500	23	19	20	18	15	11
37000	-	19	20	19	15	11
37500	-	19	20	19	15	11
38000	-	20	21	19	16	12
38500	-	20	21	20	16	12
39000	-	21	21	20	16	12
39500	-	21	22	20	16	12
40000	-	21	22	21	17	13
40500	-	22	23	21	17	13
41000	-	22	23	22	17	13
41500	-	22	23	22	18	14
42000	-	23	-	22	18	14
Maximum pressure (psi)	**23 psi**	**35 psi**	**23 psi**	**35 psi**	**23 psi**	**23 psi**
Avg. static load	**36.4**	**35.7**	**33.8**	**36.3**	**35.7**	**N/A**
Height measurement	**44.3**	**43.6**	**41.7**	**44.2**	**43.6**	**N/A**

Triple tires

Axle Weight (lbs)	480/80 R46 LI 158 Triples	480/80 R50 LI 159 Triples	520/85 R42 LI 157 Triples	520/85 R46 LI 158 Triples	520/85 R46R2 Rice & Cane LI 158 Triples
18000	6	6	6	6	6
18500	7	6	6	6	6
19000	7	6	6	6	6
19500	8	7	6	6	6
20000	8	7	6	6	6
20500	8	7	6	6	6
21000	9	8	7	6	6
21500	9	8	7	6	6
22000	10	9	7	7	7
22500	10	9	8	7	7
23000	10	9	8	7	7
23500	11	10	8	8	8

Axle Weight (lbs)	480/80 R46 LI 158 Triples	480/80 R50 LI 159 Triples	520/85 R42 LI 157 Triples	520/85 R46 LI 158 Triples	520/85 R46R2 Rice & Cane LI 158 Triples
24000	11	10	9	8	8
24500	12	11	9	8	8
25000	12	11	9	9	9
25500	12	11	10	9	9
26000	13	12	10	9	9
26500	13	12	10	10	10
27000	14	13	11	10	10
27500	14	13	11	10	10
28000	14	13	11	11	11
28500	15	14	12	11	11
29000	15	14	12	11	11
29500	16	14	13	12	12
30000	16	15	13	12	12
30500	16	15	13	13	13
31000	17	16	14	13	13
31500	17	16	14	13	13
32000	18	16	14	14	14
32500	18	17	15	14	14
33000	18	17	15	14	14
33500	19	18	15	15	15
34000	19	18	16	15	15
34500	20	18	16	15	15
35000	20	19	16	16	16
35500	20	19	17	16	16
36000	21	20	17	16	16
36500	21	20	17	17	17
37000	22	20	18	17	17
37500	22	21	18	17	17
38000	22	21	19	18	18
38500	23	21	19	18	18
39000	23	22	19	18	18
39500	24	22	20	19	19
40000	24	23	20	19	19
40500	24	23	20	19	19
41000	25	23	21	20	20
41500	25	24	21	20	20

Axle Weight (lbs)	480/80 R46 LI 158 Triples	480/80 R50 LI 159 Triples	520/85 R42 LI 157 Triples	520/85 R46 LI 158 Triples	520/85 R46R2 Rice & Cane LI 158 Triples
42000	26	24	21	20	20
Maximum pressure (psi)	**35 psi**	**35 psi**	**23 psi**	**23 psi**	**23 psi**
Avg. static load	**35.1**	**37.1**	**34.4**	**36.4**	**37.4**
Height measurement	**43.0**	**45.0**	**42.3**	**44.3**	**45.3**

3.28.11 Calculating wheel slippage for machines without a speed sensor

If the machine is not equipped with a ground speed sensor, use the following procedure to determine tire slippage.

Procedure

1. Mark a spot (1) on the side of the tire with a piece of tape or chalk. Also, mark the corresponding spot (2) on ground.
2. Operate the machine with the implement in raised position for three full revolutions (A) of the tire.
3. Clearly mark a spot (3) on the ground at end of the third full revolution of the tire.
4. Return to initial starting point (2) and then mark a new spot on side of the tire.
5. Move the machine in rearward direction to get the implement in a working position by the starting point (2). Lower the implement to a working depth.

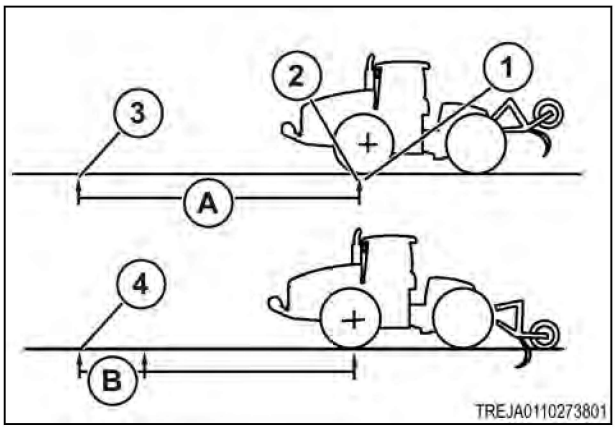

Fig. 269

6. Operate the machine with the implement in a lowered position for three full revolutions (A) of the tire. Make sure the machine is operating at a desired working speed.
7. Measure the slip distance (B). The slip distance is the length from the end point (4) of the second run to the end point (3) of the first run.
8. The percent of slippage is the distance (B) divided by (A), then multiplied by 100.

3.28.12 Removing the front weights

Procedure

1. Remove the bolts (1) that secure the weights.

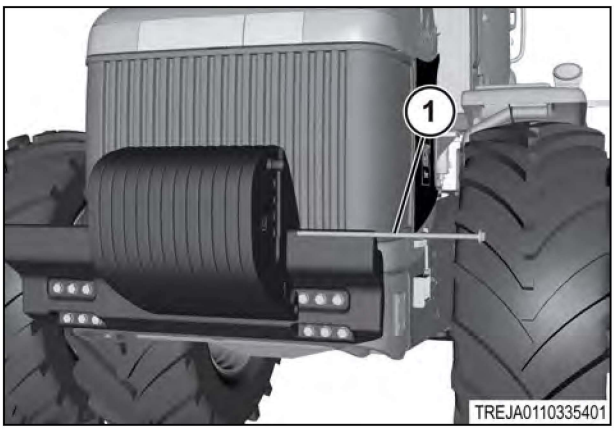

Fig. 270

2. Remove the weights (1) from the front bracket.

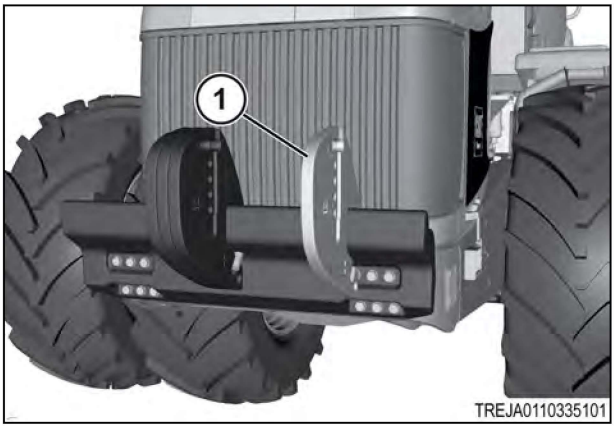

Fig. 271

3. Remove the plates (1) from the weights.



Fig. 272

4. Continue removing the weights (1) on both sides of the flagpin until all the weights are removed.

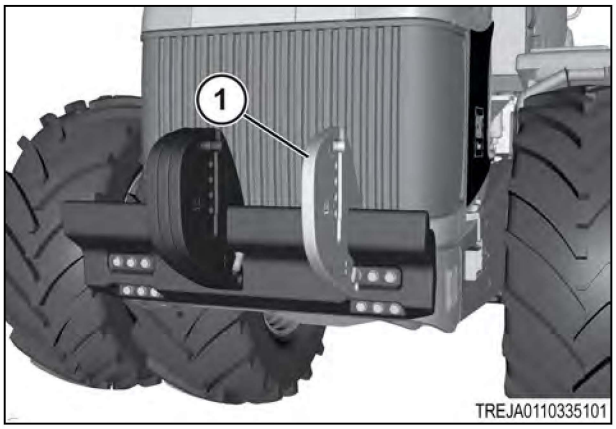

Fig. 273

5. Remove the bolt (1) that secures the flagpin.

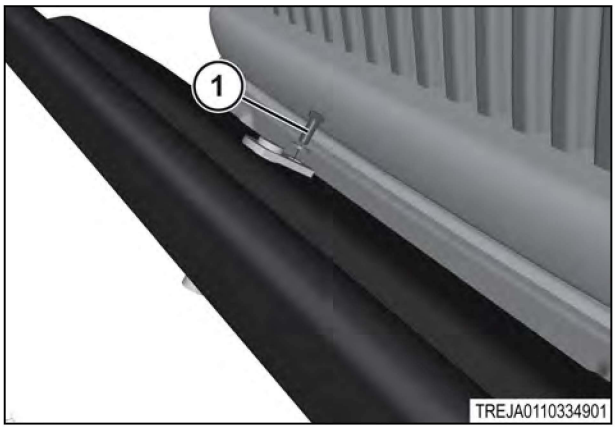

Fig. 274

6. Remove the flagpin (1).

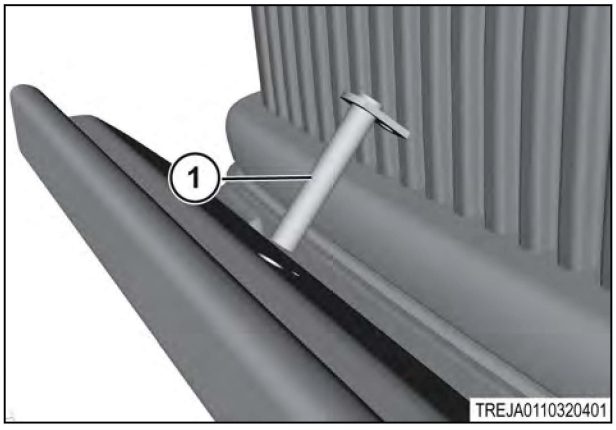

Fig. 275

7. Using a suitable lifting device, support the front weight mounting bracket (1). Remove the twelve bolts (2) that secure the bracket. Remove the mounting bracket.

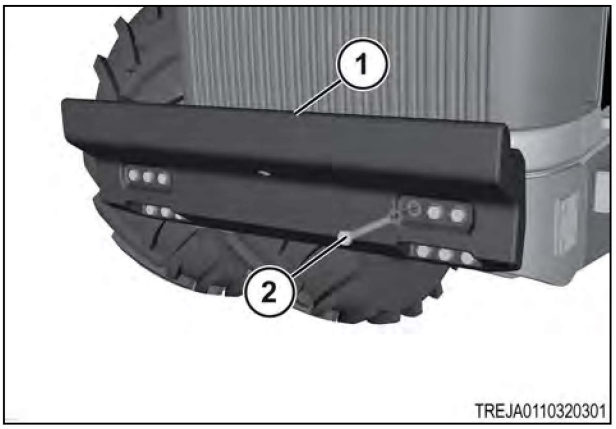

Fig. 276

8. Install plugs (1) to the front of the machine.

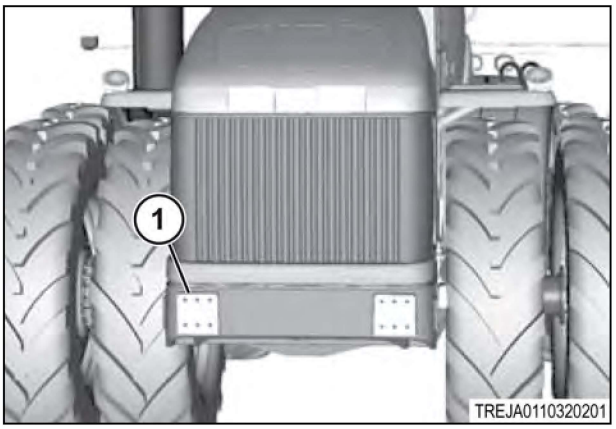

Fig. 277

3.28.13 Installing the front weights

WARNING:
The front weights are extremely heavy and require correct handling equipment to remove. Fully support and constrain tire and wheel assemblies prior to removing the weights. Failure to use the correct procedures and correct equipment can cause personal injury or can cause death because of crushing.

Procedure

1. Remove the plugs (1) from the front of the machine.

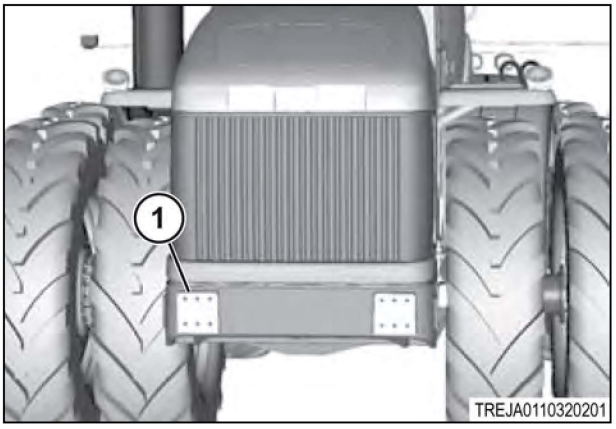

Fig. 278

2. Using a suitable lifting device, move the front weight mounting bracket (1) into position. The weight of the bracket is approximately 499 kg. Install the bracket with twelve bolts and washers (2). Torque to 530 Nm.

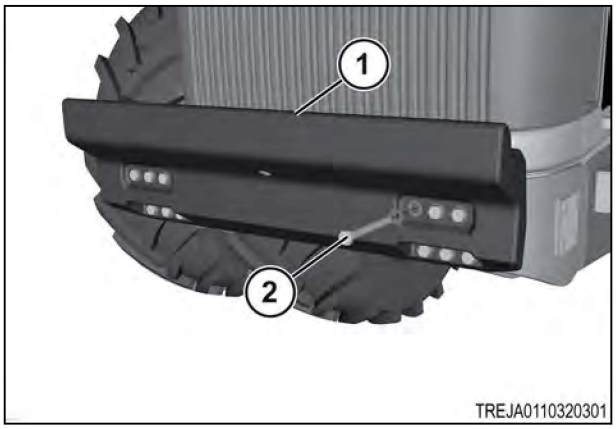

Fig. 279

3. Install the flagpin bolt (1) in the hole in the center of the front bracket. The flagpin bolt will prevent the front weights from shifting.

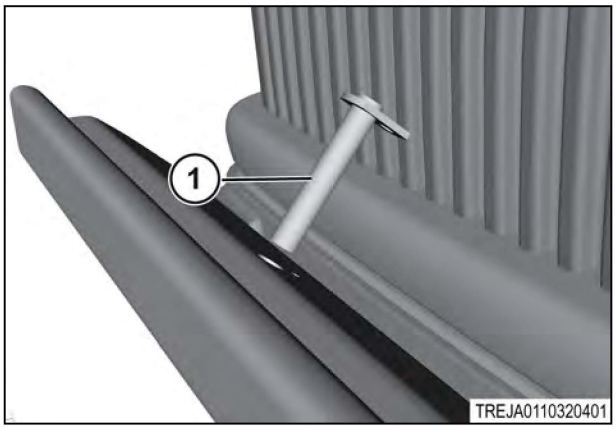

Fig. 280

4. Secure the flagpin bolt with bolt (1). Torque to 100 Nm.

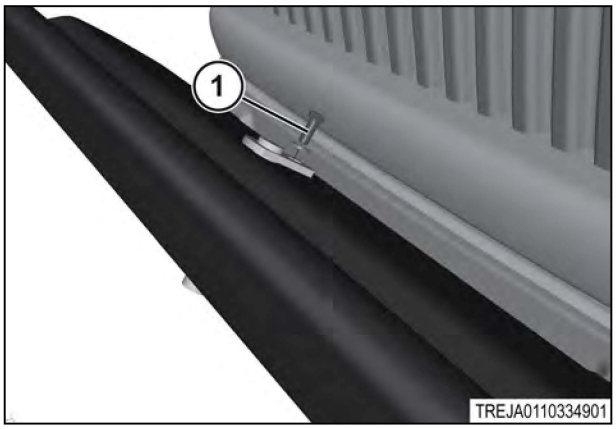

Fig. 281

5. Install the weights (1) to the front bracket. Make sure the flagpin bolt (2) is aligned with the hole in the weight.

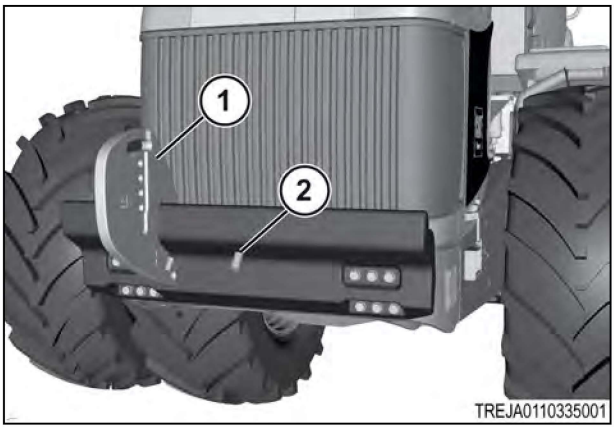

Fig. 282

6. Continue stacking weights (1) on both sides of the flagpin until the desired amount is installed.

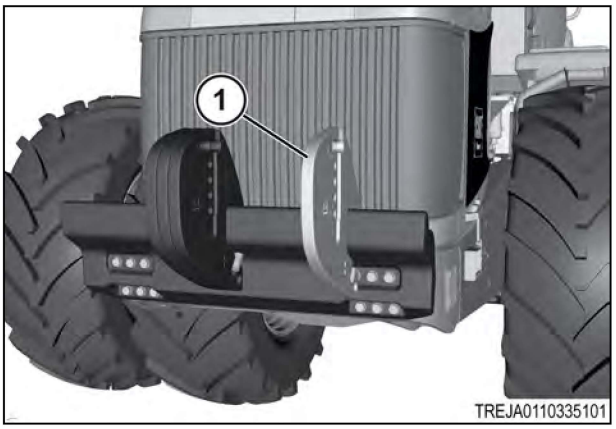

Fig. 283

7. Install the plates (1) to fasten the bolts.



Fig. 284

8. Install the bolts (1) to secure the weights.

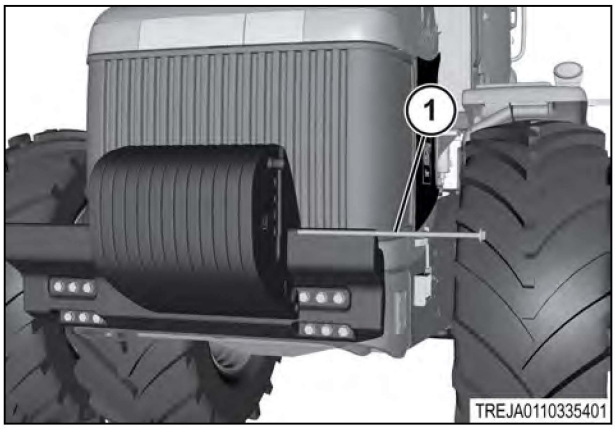

Fig. 285

9. For 20 weights, use two bolts (1) to attach the weights using two plates (2). Torque to 240 Nm.

10. Install the plates in opposite orientations.

11. Install six weights between the two plates

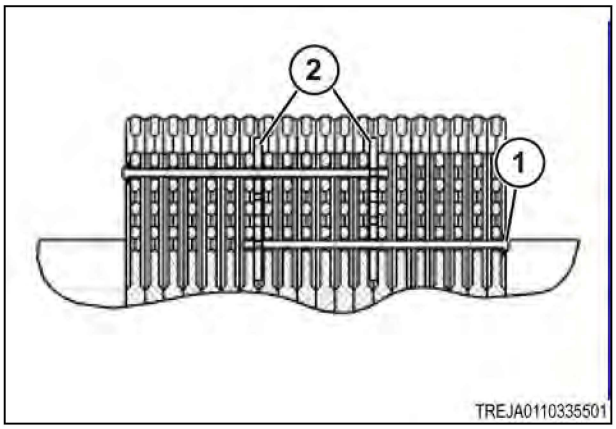

Fig. 286

12. For 32 weights, use six bolts (1) to attach the weights using three plates (2). Torque to 240 Nm.

13. Install the first two plates in the same orientation after installing six weights.

14. Install the third plate in the opposite orientation as the first two plates.

15. Install the third plate after another three weights are installed on same side.

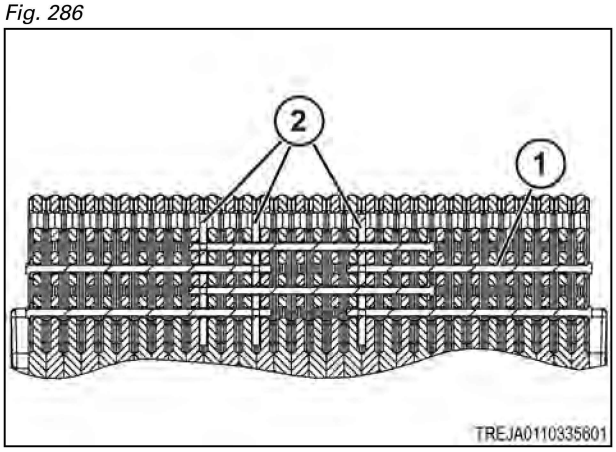

Fig. 287

3.28.14 Removing the wheel weights

3.28.14.1 227 kg (500 lb)

WARNING:
Wheel weights are extremely heavy and require proper handling equipment to remove. Fully support and constrain the tire and the wheel assemblies before removing weights. Failure to use the correct procedures and the correct equipment can cause personal injury or death because of crushing.

NOTE: *Weight installation special tooling part number 332298*

Procedure

1. If only the outside weights (1) are being removed than removing the wheel is not necessary(2). Support the weight using the special tooling and an overhead crane. Remove the three bolts (3) and then remove the weight. Repeat the same procedure for the remaining wheels.

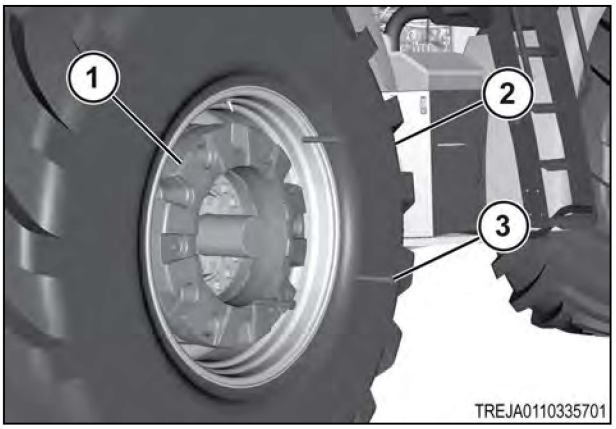

Fig. 288

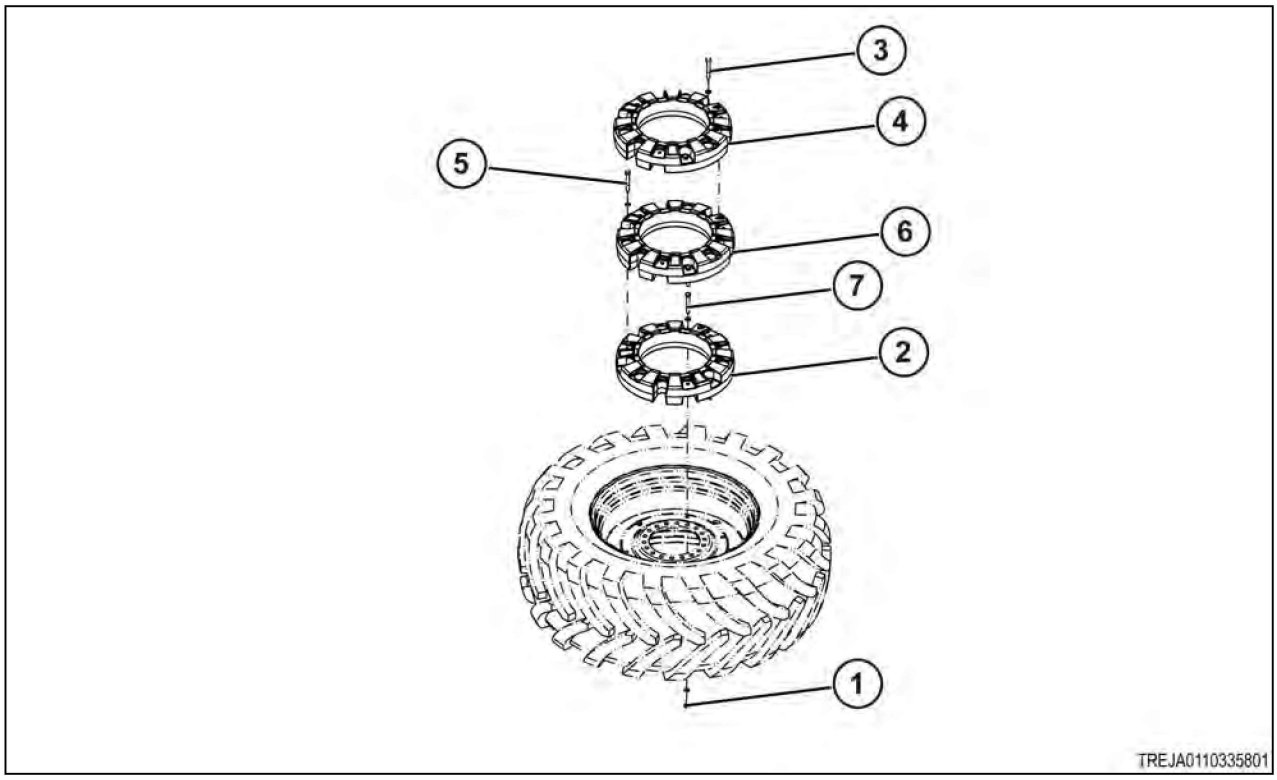

Fig. 289

2. The tire assembly must first be removed from the axle before the inside weights can be removed from the rim. Set the tire and the rim assembly on an elecated surface. Make sure there is access to the nut (1) that secures the inner weight (2).

3. Remove the three bolts (3) and then use a suitable lifting device to remove the outer weight (4). Remove the three bolts (5) and then use a suitable lifting device to remove the middle weight (6). Remove the three bolts (7) and then use a suitable lifting device to remove the inside weight (2).

4. Turn the wheel over and repeat the procedure to remove the weights. Repeat the same procedure for the remaining wheels.

3.28.14.2 364 kg (800 lb)

Procedure

1. If only the outside weights (1) are being removed than removing the wheel is not necessary(2). Support the weight using the special tooling and an overhead crane. Remove the three bolts (3) and then remove the weight. Repeat the same procedure for the remaining wheels.

2. The tire assembly must first be removed from the axle before the inside weights can be removed from the rim.

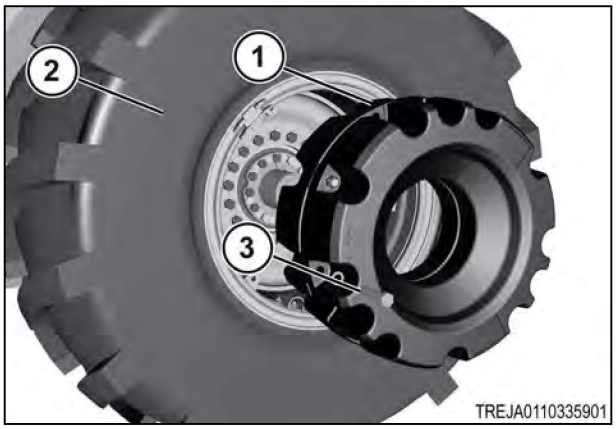

Fig. 290

3. Remove the three bolts (1) that secure the weight (2) to the rim. Turn the wheel over and repeat the procedure to remove the weights. Repeat the same procedure for the remaining wheels.

4. Remove the three bolts (1) and disassemble the weights.



Fig. 291

3.28.15 Installing the wheel weights

3.28.15.1 227 kg (500 lb)

WARNING:
Wheel weights are extremely heavy and require proper handling equipment to remove. Fully support and constrain the tire and the wheel assemblies before removing weights. Failure to use the correct procedures and the correct equipment can cause personal injury or death because of crushing.

NOTE:

Weight installation special tooling part number 332298

Up to three 227 kg (500 lb) can be mounted together as an assembly. To help with assembly, do not assemble more than two weights together before installing the weights.

Procedure

1. The ballast needs vary according to the machine model, the implement being pulled, and the field conditions.

2. If only the outside weights (1) are to be installed, then removing the wheel (2) is not necessary. Support the weight using the special tools and an overhead crane. Move the weight into position. Mount the weight with three bolts (3) and tighten to 530 Nm (390 lbf ft). Repeat the procedure for the remaining wheels.

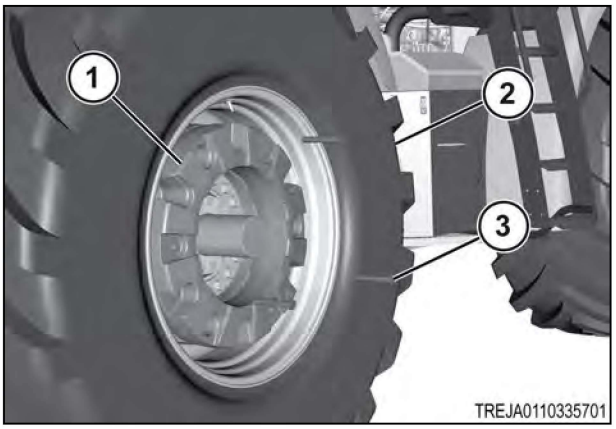

Fig. 292

3. Install all the wheels.
   See the information for installing a wheel.
4. Lower the machine to the ground.
5. Drive the machine for a minimum of ten minutes to seat the wheel weights. Operate the machine at 5 to 8 km/h (3 to 5 mph). Stop a minimum of five times using the service brake.
6. Check all of the counterweight bolts. Tighten all the counterweight bolts to 530 Nm (390 lbf ft).
7. Set the tire and the rim assembly (1)on an elevated surface. Make sure there is access to the nut (2) that fastenes the weight (3).
8. Use a correct lifting device to move the weight(s) into position on the rim. Install the weight with three bolts (4) and fasten with nuts and washers (2). Torque to 530 Nm (390 lbf ft).
9. Turn the tire over and install the desired amount of weights on the opposite side using the same procedure.
10. If a third weight needs to be installed, turn the tire and rim assembly over and install the third weight.

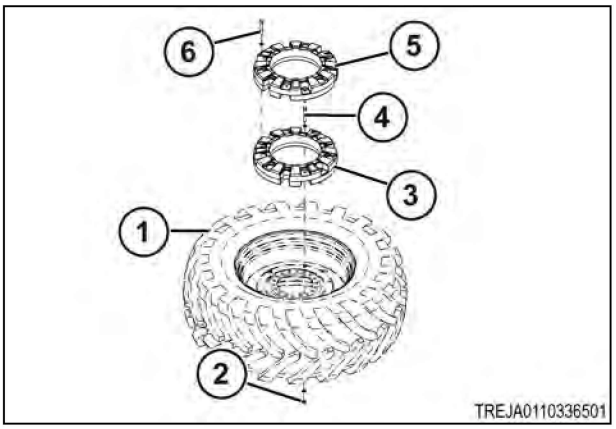

Fig. 293

11. Repeat the same procedure for the remaining wheels.
12. Install the wheels.
    See the information for installing a wheel.
13. Lower the machine to the ground.
14. Drive the machine for a minimum of ten minutes to seat the wheel weights. Operate the machine at 5 to 8 km/h (3 to 5 mph). Stop a minimum of five times using the service brake.
15. Make sure all the counterweight bolts do not rotate when tightened to 460 Nm (340 lbf ft). Tighten all the counterweight bolts to 530 Nm (390 lbf ft).

3.28.15.2 364 kg (800 lb)

WARNING:
Wheel weights are extremely heavy and require proper handling equipment to remove. Fully support and constrain the tire and the wheel assemblies before removing weights. Failure to use the correct procedures and the correct equipment can cause personal injury or death because of crushing.

Up to four 364 kg (800 lb) weights can be used for wheel ballast on 35.5L-32 single tires.

NOTE:

Weight installation special tooling part number 332298

Procedure

1. Assemble the two weights together before mounting the wheel. Tighten all the bolts (1) to 530 Nm (390 lbf ft).

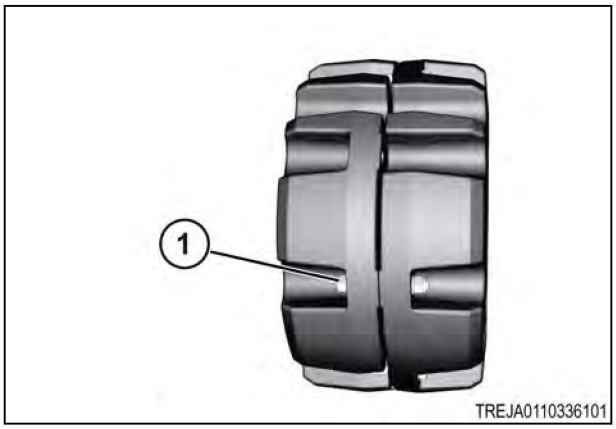

Fig. 294

IMPORTANT:
Tighten the bolts after ten hours of service and every 250 hour intervals after.

2. Removing the wheel is not necessary if only the inside weights(1) are being installed(2).
3. Move the weight into position using a correct lifting device. Mount the weight with three bolts (3) and tighten to 530 Nm (390 lbf ft). Repeat the procedure for the remaining wheels.
4. Install all the wheels.
   See the information for installing a wheel.
5. Lower the machine to the ground.
6. Drive the machine for a minimum of ten minutes to seat the wheel weights. Operate the machine at 5 to 8 km/h (3 to 5 mph). Stop a minimum of five times using the service brake.



Fig. 295

7. Check all of the counterweight bolts. Tighten all the counterweight bolts to 530 Nm (390 lbf ft).
8. The tire and rim assembly must be removed from the axle before installing the inside weights on the rim.
9. Use a correct lifting device to move the weight (2) into position on the rim. Install the weight with three bolts (1) and tighten to 530 Nm (390 lbf ft).
10. Turn the tire over and install the desired amount of weights on the opposite side using the same procedure.
11. Repeat the procedure for the remaining wheels.
12. Install all the wheels.
    See the information for installing a wheel.
13. Lower the machine to the ground.

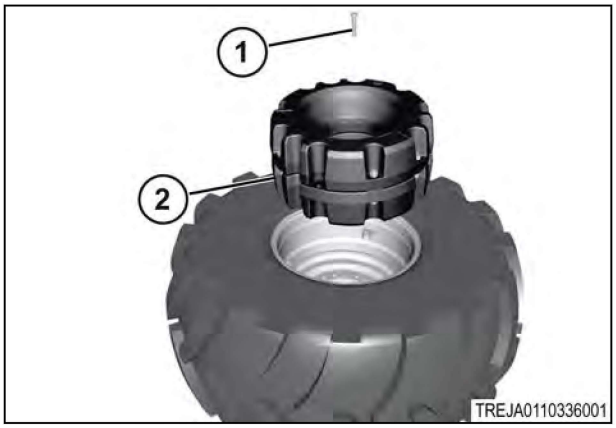

Fig. 296

14. Drive the machine for a minimum of ten minutes to seat the wheel weights. Operate the machine at 5 to 8 km/h (3 to 5 mph). Stop a minimum of five times using the service brake.
15. Make sure all the counterweight bolts do not rotate when tightened to 460 Nm (340 lbf ft). Tighten all the counterweight bolts to 530 Nm (390 lbf ft).

3.29 Special applications

The machine is available in a special application configuration for towing semi mounted and dolly equipped scraper pans.

NOTE: *Before attempting to set up machine or scraper read the Operation and Maintenance manual for both.*

Special application machines include the following equipment and options:

- Special application hitch plate
- Differential lock
- Tow cable
- Rotating beacons
- Hydraulic trailer brake control
- Heavy-duty under frame guards
- Availability of high-flow hydraulic couplers

See the dealer for a complete list of available options for special application machines.

NOTE: *Towed scraper manufacturers provide a drawbar to fit the machine. Contact the towed scraper manufacturer for the correct drawbar.*

3.29.1 Special applications drawbars and hitches

Special application machines are equipped with a universal drawbar support (1), less drawbar. A special drawbar is required for towing semi-mounted scrapers and must be furnished by the scraper manufacturer. The drawbar is stronger and shorter so it can support significant weight transferred from the scraper to the machine. Because of the heavy load, the standard agricultural machine drawbars cannot be used for semi-mounted scrapers.

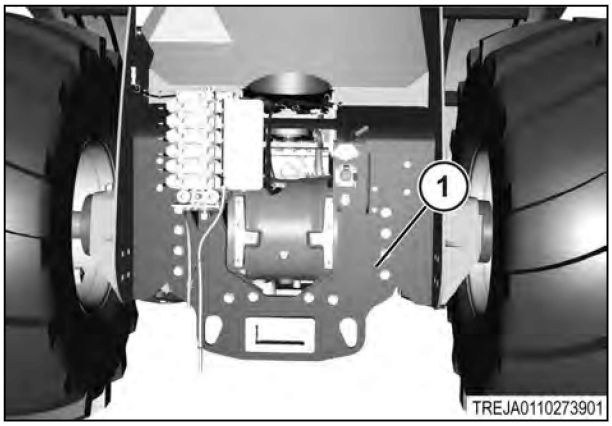

Fig. 297

3.29.2 Ballasting for towed scrapers

Enter a short description of your concept here (optional).

Proper ballasting is necessary for the best performance and ride quality. It is recommended to ballast the machine with approximately 65 to 75 percent of the machine weight on the front axle when towing scraper pans.

IMPORTANT: *The operating weight must not more than the rated maximum values recorded in the machine ballasting guidelines. Operating at full load below 6.5 km/h will reduce the powertrain life.*

A combination of front suitcase and the wheel weights are necessary to get the correct balance and ballast. See information in the machine ballasting guidelines to determine the correct ballasting requirements befire installing the weights.

3.29.3 Hydraulic connections for the towed scraper

The necessary hydraulic connections are determined by the type of the scraper. Most scrapers require two or three double acting remote implement control valves for each unit. Units equipped with laser leveling

will require a connection to a power beyond circuit on the machine. If necessary, the power beyond option is available as a field-installed kit from the dealer.

Before connecting the lines from the scraper to the machine, wipe the inside of the coupler and the outside of tip on the implement hose. Make sure to set the lines to prevent damage from tangling with the machine or the scraper components. To prevent this, route the hoses securely along the tongue of the scraper with a hanger or the provided bracket.

Special application machines have a hydraulic coupler to connect to scraper-mounted hydraulic braking systems. Hydraulic brakes are recommended on all towed scrapers. Scraper-mounted brakes increase stopping performance and extend the service life of the machine brakes.

3.29.4 Towed scraper general guide lines

- Operate the machine in straightest possible line when loading scraper.
- Engage the differential lock while filling.
- When operating on steep slopes, always go up or down the slope.
- Do not load the scraper in a gear lower than the gear necessary to fill the scraper.
- Reduce the speed when operating on a rough haul road, especially with a loaded scraper.
- Do not push-load scrapers during the loading cycle as damage to the machine powertrain and the scraper can occur.
- Do not stay in the cut too long. Overloading the scraper bowl can cause the material to flow over the sides or bulldoze material around the cutting bit. Additional material moved results in loss of productivity, because of the extra loading time required.
- Do not make a cut too deep for the conditions. Make sure that the minimum speed of the machine during cut is above 6.5 km/h.
- Do not load the scraper at excessively high speeds. Even though the conditions of the material can permit a fast cut, do not fill the scraper above 13 km/h. The life of the powertrain is adversely changed when there is continuously high torque on the powertrain components that are designed for roading.
- Do not have more than thirty percent slip during loading.

3.29.5 Loading the scraper

Procedure

1. Engage the differential lock (1) before beginning the cut.

2. Partially open the gate and lower the scraper to start the loading cycle.

3. Adjust the cutting depth with short movements of the hydraulic lever to keep a loading speed of 6.5 km/h.

4. As the bowl starts to fill, the material must break.

If the machine moves to fast, soil can roll and leave voids as the material fills the bowl. Voids in material reduce the filling efficiency of the bowl.

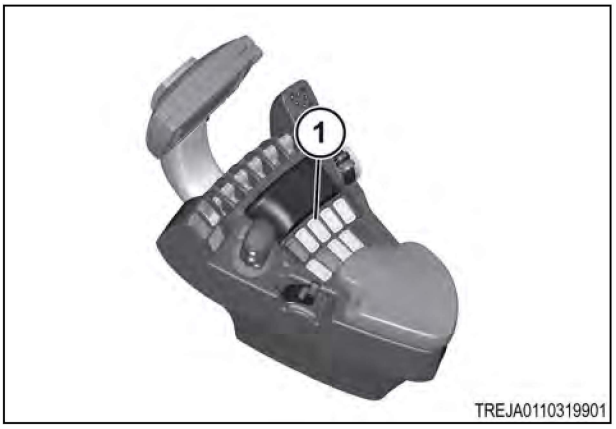

Fig. 298

3.29.6 Loading the tandem scraper

Procedure

1. Engage the differential lock 1 while loading.
2. The most satisfactory method is to fill the front scraper bowl first.
3. When the front scraper is full, the second scraper loads faster.
4. Lower the frame of the first scraper until the bowl starts to engage the ground.
5. Lower the frame of the rear scraper until the bowl starts to engage the ground.
6. Raise the rear scraper frame so the cutting edge is just above the ground.
7. Lower the frame of the front scraper to start filling the bowl.

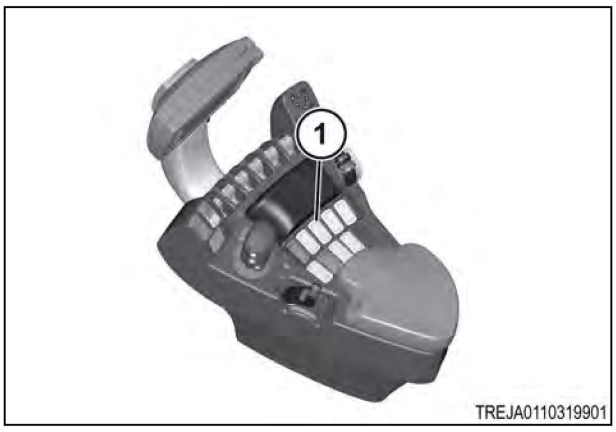

Fig. 299

8. Once the first bowl is full, raise the frame and close the gate.
   As the first scraper raises, the tongue and the frame of the second scraper automatically lowers.
9. Adjust the second scraper as necessary.

3.29.7 Hauling the scraper

Procedure

1. Raise the scraper to full height.
2. Make sure the gates are in the closed position.
3. Reduce travel speed to prevent road hazards that can cause damage to the machine or the scraper.

3.29.8 Dumping the scraper

Procedure

1. Lower the unit near the ground before starting the dumping cycle.
2. Fully lift the gate.
3. Continue to operate the hydraulic circuit until the bowl is completely empty.
4. Fully close the gate.

3.29.9 Towing a stuck scraper

Procedure

1. Fasten the machine to the rear of the scraper.
2. Dig around all the tires as much as possible before towing.
3. Fasten only to the tow cable that is provided on the front of the machine if the machine must be pulled out forward.
4. Pull straight as possible and avoid contact between the cable and the inner front tires.

3.30 Aftermarket equipment applications

3.30.1 Chemical tank attachment

Aftermarket chemical tanks can be mounted to the front of the machine. The preferred configuration is to use two equal-dimensioned tanks. Each tank must be located at the sides of the machine as near the front of the front tires as practical. The maximum recommended total capacity is 2270 L. The total weight, including liquid, must not be more than 2727 kg. The tank support structure must mount to both the front surface of the frame casting and the sides of each frame rail.

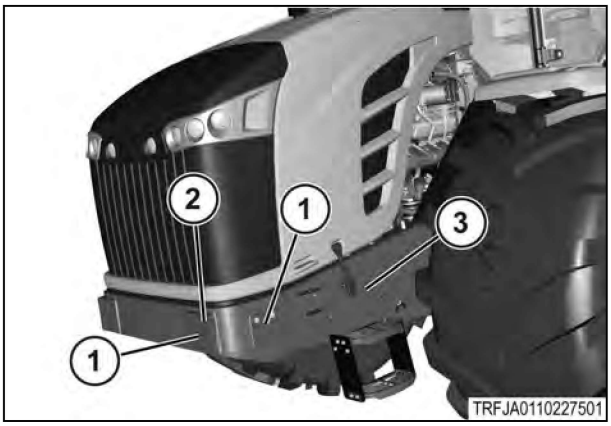

Fig. 300

The other option is to install a single front tank. The maximum recommended capacity is 1515 L . The center of gravity should be no more than 610 mm in front of the counterweight bracket mounting surface. The total weight, including liquid, must not be more than 1818 kg. The tank support structure must mount to either:

- The front mounting surfaces (2) and side mounting surfaces (1) of the front frame casting
- The front surface (2) of the frame casting
- The sides of each frame rail(3)

IMPORTANT: *When chemical tanks are installed, adjust the machine ballast to limit the maximum weight of the machine to 27216 kg when the tanks are full.*

NOTE: *Contact the dealer for all other approved aftermarket equipment applications.*

4. Maintenance

4.1 Lubricant viscosities and refill capacities . . . 215
4.1.1 Lubricant viscosities for ambient temperatures . . . 215
4.1.2 Lubricant viscosities . . . 215
4.1.3 Fill capacities . . . 215
4.2 Service intervals . . . 216
4.2.1 Maintenance chart . . . 216
4.2.2 Maintenance schedule . . . 217
4.3 Fuse panel . . . 219
4.3.1 Main fuse panel . . . 219
4.3.2 Fuse block one . . . 220
4.3.3 Fuse block two . . . 221
4.3.4 Fuse relay block one . . . 222
4.3.5 Fuse relay block two . . . 223
4.3.6 Relay and fuse panel for chassis . . . 223
4.3.7 Main fuse . . . 224
4.4 Engine . . . 225
4.4.1 Checking the engine oil level . . . 225
4.4.2 Changing the engine oil and oil filter . . . 226
4.4.2.1 Inspecting used filters . . . 228
4.4.3 Engine oil sample port . . . 228
4.4.4 Engine belts . . . 228
4.4.5 Replacing the engine air filter . . . 229
4.4.6 Engine temperature . . . 229
4.4.7 Opening the engine cover . . . 230
4.5 Fuel system . . . 231
4.5.1 Filling the fuel system . . . 231
4.5.2 Prevent static discharge when fueling . . . 232
4.5.3 Changing the prefilter and the fuel filters . . . 232
4.5.4 Priming the fuel system . . . 233
4.5.5 Draining water and sediment from the fuel tank . . . 234
4.5.6 Fuel cap . . . 235
4.5.7 Fuel tank breather . . . 235
4.6 SCR system . . . 236
4.6.1 Selective catalytic reduction (SCR) System . . . 236
4.6.2 Supply module . . . 236
4.6.3 Filling a diesel exhaust fluid tank . . . 237
4.6.4 DEF storage and shelf life . . . 237
4.7 Cooling system . . . 238
4.7.1 Cleaning the cooling cores . . . 238
4.7.2 Water valve shutoff . . . 238
4.7.3 Checking the engine coolant level . . . 239
4.7.4 Coolant sample . . . 239
4.7.5 Coolant system fluid . . . 239
4.7.6 Cooling system additives . . . 240
4.7.7 Draining the engine coolant . . . 240
4.7.8 Flushing the cooling system . . . 241
4.7.9 Refilling the cooling system . . . 241
4.7.10 Replacing the water temperature thermostat . . . 242
4.8 Power train . . . 243
4.8.1 Checking the power train fluid level - daily . . . 243

4.8.2 Checking the power train system fluid level - 400 hours . . . 243
4.8.3 Adding power train system fluid . . . 244
4.8.4 Draining excess power train system fluid . . . 244
4.8.5 Changing the power train system fluid . . . 245
4.8.6 Cleaning the breather (transmission) . . . 249
4.9 Implement and steering hydraulic system . . . 250
4.9.1 Checking the implement and steering system fluid level . . . 250
4.9.2 Changing the implement and steering system fluid . . . 250
4.9.3 Cleaning the breather (hydraulic reservoir) . . . 253
4.10 Cab filtration . . . 254
4.10.1 Primary fresh air filter . . . 254
4.10.2 Removing the primary air filter . . . 254
4.10.3 Filter maintenance . . . 254
4.10.4 Cleaning the filter . . . 255
4.10.5 Installing the primary air filter . . . 255
4.10.6 Recirculation filter . . . 255
4.10.7 Removing the recirculation filter . . . 256
4.10.8 Installing the recirculation filter . . . 256
4.11 Locking the articulation joint area . . . 258
4.12 Grease point locations . . . 259
4.12.1 Drivelines grease point locations . . . 259
4.12.2 Steering cylinders grease point locations . . . 259
4.12.3 Upper articulation grease point location . . . 260
4.12.4 Lower articulation pin grease point location . . . 260
4.12.5 Extremity arm pivots grease point locations . . . 261
4.12.6 Power take-off grease point locations . . . 261
4.13 Wheels . . . 262
4.13.1 Wheel removal . . . 262
4.13.2 Removing the outside wheel . . . 262
4.13.3 Removing the center wheel . . . 263
4.13.4 Removing the inside wheel . . . 264
4.13.5 Wheel installation . . . 266
4.13.6 Installing the inside wheel . . . 266
4.13.7 Installing the center wheel . . . 269
4.13.8 Installing the outside wheel . . . 272
4.13.9 Re-torque the wheel and counterweight . . . 273
4.14 Hub and collet . . . 274
4.14.1 Removing the hub and collet . . . 274
4.14.2 Installing the hub and collet . . . 274
4.14.3 Hub spacing . . . 276
4.15 Batteries . . . 278
4.15.1 Removing the batteries . . . 278
4.15.2 Installing the batteries . . . 280

4.1 Lubricant viscosities and refill capacities

4.1.1 Lubricant viscosities for ambient temperatures

Proper oil viscosity grade is determined by the minimum outside temperature while the machine is started and while operated.

To determine the proper oil viscosity grade, refer to the minimum column in the following table.

This information reflects the coldest ambient temperature condition for starting and for operating a cold machine.

Refer to the maximum column in the table to select the oil viscosity grade for operating the machine at the highest temperature anticipated.

Use the highest oil viscosity allowed for ambient temperature when starting the machine.

Machines operated continuously, should use oils having higher oil viscosity in final drives and in differentials.

Oils with higher oil viscosity will maintain the highest possible oil film thickness.

Consult a dealer if additional information is needed.

4.1.2 Lubricant viscosities

Compartment or system	Oil type and classification	Oil viscosities	Celsius		Fahrenheit	
			Minimum	Maximum	Minimum	Maximum
Engine crankcase AP168, AP168-4	CJ-4 or ACEA E9 AGCO Parts Premium Extra Engine Oil	SAE 10W-40	-25	40+	-13	104
		SAE 15W-40	-20	40+	-4	104
Hydraulic system	AGCO®Permatran® 821XL	SAE 10W-30	-25	40	-13	104
Transmission and axles	AGCO®Permatran® 821XL	SAE 10W-30	-25	40	-13	104

4.1.3 Fill capacities

Approximate fill capacities	
Engine coolant	66 L (18.5 gal)
Fuel (w/after-treatment system)	1514 L (400 gal)
Implement/ steering hydraulic circuit	121 L (32 gal)
Transmission and axles	170 L (45 gal)
Fuel (LRC only)	1514 L (400 gal)
Diesel exhaust fluid (DEF)	198 L (52.4 gal)
Engine oil	59 L (15.6 gal)
A/C refrigerant (R - 134a)	1.85 kg (4.07 lb)
Windshield washer fluid	5 L (1.32 gal)
Lubrication (articulation and drivelines)	1 kg (2.2 lb)

4.2 Service intervals

IMPORTANT:
Always stop the engine and take the key with you before starting service work.
When required:

- *Cab recirculation filter - clean/inspect/replace*
- *Cab air filter - clean/replace*
- *Check the HVAC drain lines and clean as needed*
- *Primary engine air filter - clean*
- *Batteries - replace*
- *Air conditioner and alternator belt - replace*
- *Fan belt - replace*
- *Fan drive - clean*
- *Cooling cores - clean*
- *Drawbar wearplates and swing stops - replace*
- *Engine air cleaner - inspect/replace*
- *Fuel tank water and sediment - drain*
- *Fuses, circuit breakers, and relays - replace/reset*
- *Quick hitch - lubricate*
- *Fuel system water separator - drain*
- *Window washer reservoir - fill*
- *Window wipers - inspect/replace*
- *Windows - clean*
- *Water temperature regulator*

4.2.1 Maintenance chart

Maintenance work	Service interval / running hours				
	10	100	400	800	4500
Check the engine oil level	x[1]				
Check the coolant level	x[1]				
Check for oil, fuel or coolant leakages	x[1]				
Clean the cooling system (from outside)		x			
Check the condition of the belt		x			
Change the engine oil and the oil filter			x[2]		
Change the fuel filters				x[3]	
Update engine software			x		
Turbocharger and intercooler inspection in an authorised workshop					x
Change the SCR supply module main filter	Once a year. [4]				
Change the SCR supply module inlet filter	Once a year. [4]				
Change coolant	Every two years.				

[1] or once a day.
[2] or once a year (at the end of the season).
[3] or once a year (at the end of the season) or earlier if the engine control system notifies by specific service code.
[4] or after 1200 running hours.

4.2.2 Maintenance schedule

Initial checks: Make sure that all hose clamps on the engine are tight at 10 hours and again at 50 hours. If it is necessary, tighten and torque the hose clamps . Do the checks again when a hose is replaced.

Every 10 hours or daily	Every 50 hours	Every 250 hours	Every 400 hours	Every 1000 hours	Other	Service Item
x						*Fill the fuel system*
x						*Check the power train oil level*
x						*Check the hydraulic system oil level*
x						*Check / drain the fuel water separator*
x						*Examine the engine air filter restriction indicator*
	x					*Drain the air tank*
	x					*Lubricate the articulation pivot pins*
	x					*Lubricate the articulation cylinder pins*
	x					*Lubricate the 3-point linkage*
		x				*Examine the batteries*
		x				*Get a sample of the power train system oil for analysis*
		x[1]			Every 1500 hours	*Replace the power train oil and filters*
		x				*Get a sample of the hydraulic implement system oil for analysis*
		x[2]			Every 1500 hours	*Replace the implement oil and filters*
		x				*Get a sample of the engine oil for analysis*
			x			*Clean or replace the hydraulic system breather*
			x			*Examine/replace the fuel cap filter*
				x		*Clean / replace the fuel cap*
				x [3]		*Replace the fuel tank breather*
				x		*Replace the primary engine air filter*
					Every third primary filter replacement	*Replace the safety (secondary) engine air filter*
				x		*Replace the case drain filter*

Every 10 hours or daily	Every 50 hours	Every 250 hours	Every 400 hours	Every 1000 hours	Other	Service Item
				x		*Examine the ROPS*
				x		*Examine the seat belt*
.1200 hours or annually, that which occurs first.						*Replace the DEF / AdBlue pump - main filter*
1200 hours or annually, that which occurs first.						*Replace the DEF / AdBlue tank breather*
Every 1500 hours.						*Clean the power train oil suction screen*
Every 2000 hours.						*Replace the air dryer cartridge*
Every two years or at 3000 hours.						*Replace the refrigerant accumulator*

[1] initial occurrence, filters only.
[2] initial occurrence, filters only.
[3] or once a year, that which occurs first.

4.3 Fuse panel

The main fuse panel is located on the right-hand side of cab seat near floor of the cab. To get access to the fuses, two spring loaded fasteners (1) need to be loosened.

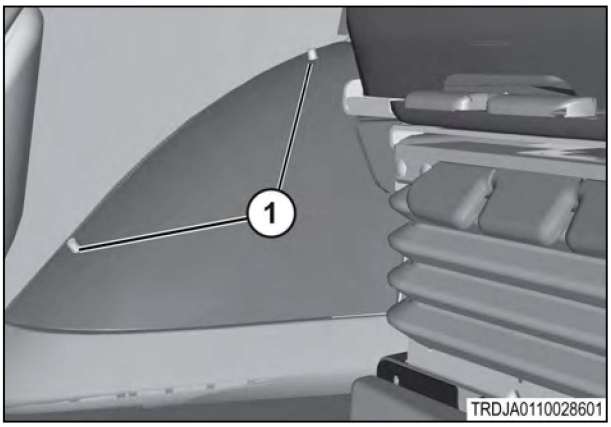

Fig. 1

4.3.1 Main fuse panel

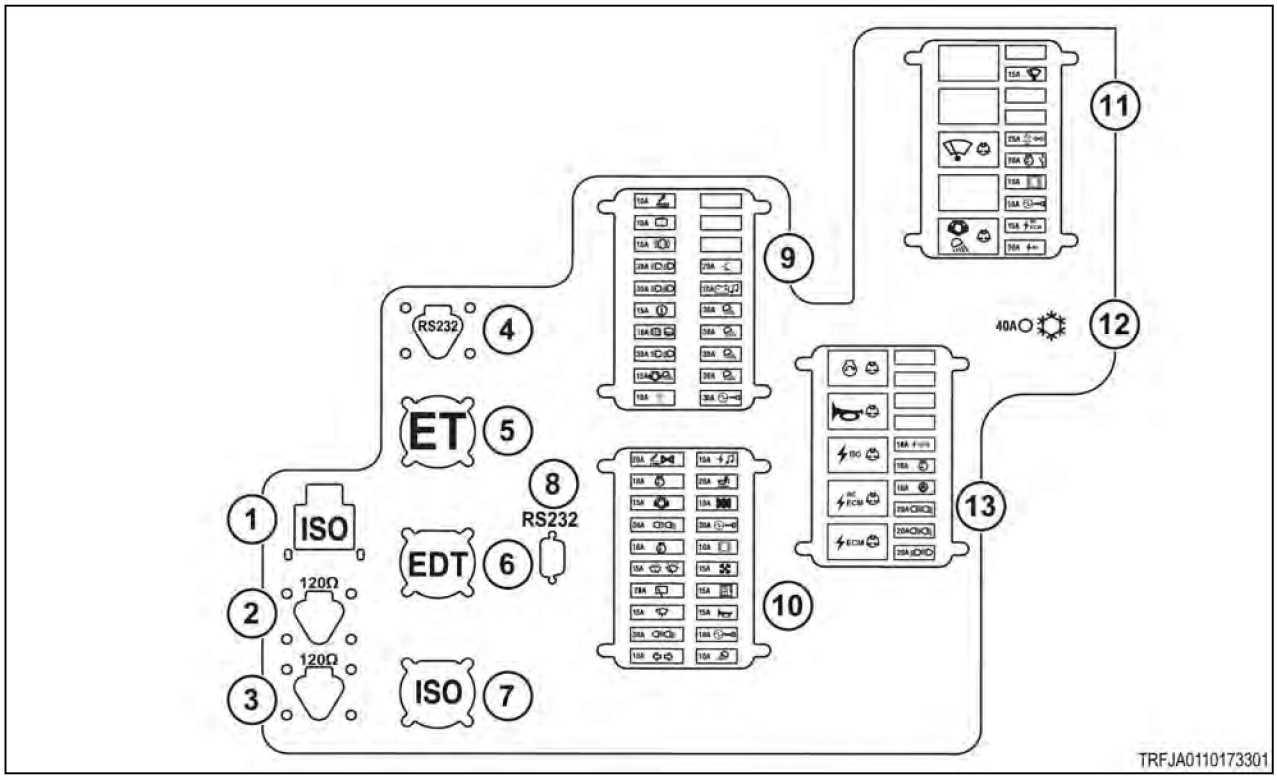

Fig. 2

The main fuse panel is located inside of the cab.

Item	Description
1	ISO - TBC (Terminating bias circuit)
2	Power train resistor 120 OHM
3	Light /Auxiliary resistor 120 OHM
4	Guidance RS232
5	ET - Electronic service connector
6	EDT - Electronic diagnostic service connector

Item	Description
7	ISO - Service connector
8	Guidance RS232
9	Fuse block 1
10	Fuse block 2
11	Fuse / Relay block 1
12	40 AMP - A/C fuse 1
13	Fuse / Relay block 2

4.3.2 Fuse block one

Fuse block one		
Item	**Rating**	**Description**
	Switched battery	
1	10 Amp	Cigar lighter
2	10 Amp	Rear washer
3	15 Amp	Brakes
4	30 Amp	Light module top
5	30 Amp	Light module top
6	15 Amp	Amplifier power
7	10 Amp	Mirror power/ heat
8	30 Amp	Light module top
9	15 Amp	Trailer lights
10	10 Amp	Telemetry
Item	**Rating**	**Description**
	Battery +	
11	Not used	
12	Not used	
13	Not used	
14	20 Amp	Pivoting step
15	10 Amp	Radio battery power
16	30 Amp	Roof light module
17	30 Amp	Roof light module

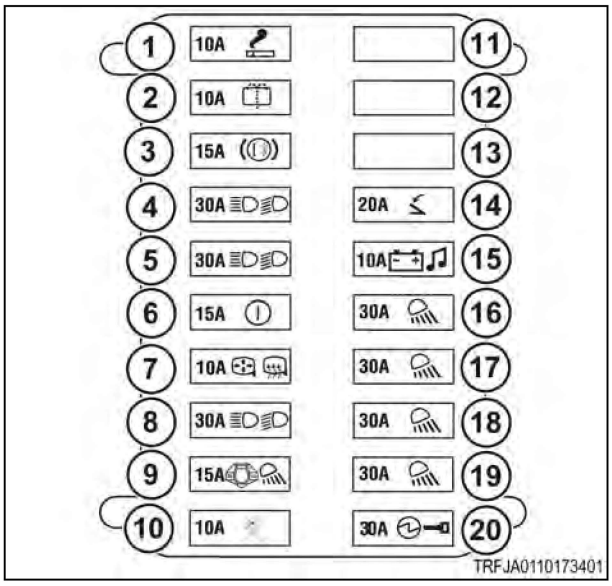

Fig. 3

Fuse block one		
18	30 Amp	Roof light module
19	30 Amp	Roof light module
20	30 Amp	Power port

4.3.3 Fuse block two

Fuse block two		
Item	**Rating**	**Description**
	Switch battery	
1	20 Amp	Implement valve / hitch valve
2	10 Amp	Inch sensor / steer sensor / rock shaft sensor
3	15 Amp	Trailer auxiliary
4	30 Amp	Bottom module
5	10 Amp	Decel sensor / air sensor / belt tension
6	15 Amp	Front washer / intermittent wiper
7	20 Amp	Rear wiper
8	15 Amp	Front wiper
9	30 Amp	Bottom module
10	10 Amp	Turn signal
Item	**Rating**	**Description**
11	15 Amp	Radio
12	20 Amp	Seat
13	15 Amp	Terminal strip
14	30 Amp	Power ports switched
15	10 Amp	Tractor management center (TMC)

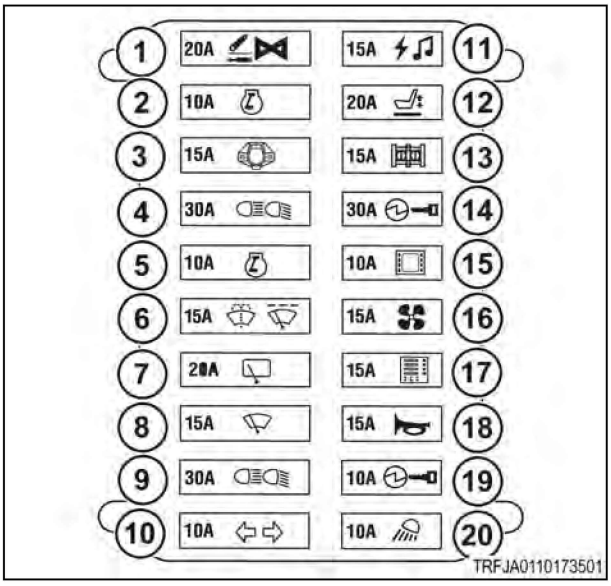

Fig. 4

Fuse block two		
16	15 Amp	Fan control / DEF quality sensor
17	15 Amp	Product link
18	15 Amp	Horn
19	10 Amp	Cell phone port / power port
20	10 Amp	Light switch

4.3.4 Fuse relay block one

Fuse / relay block one		
Item	**Relay**	**Description**
1	Not used	
2	Not used	
3	35 Amp	High wiper relay
4	Not used	
5	35 Amp	Trailer work light relay
Fuse / relay block one - battery +		
Item	**Fuse**	**Description**
6	Not used	
7	15 Amp	Front wiper (high)
8	Not used	
9	Not used	
10	25 Amp	UREA Heater / UREA pressure
11	20 Amp	Transmission ECU
12	10 Amp	Monitor (monitor bar)
13	10 Amp	Battery power
14	15 Amp	ISO ECU power
15	30 Amp	ISO power

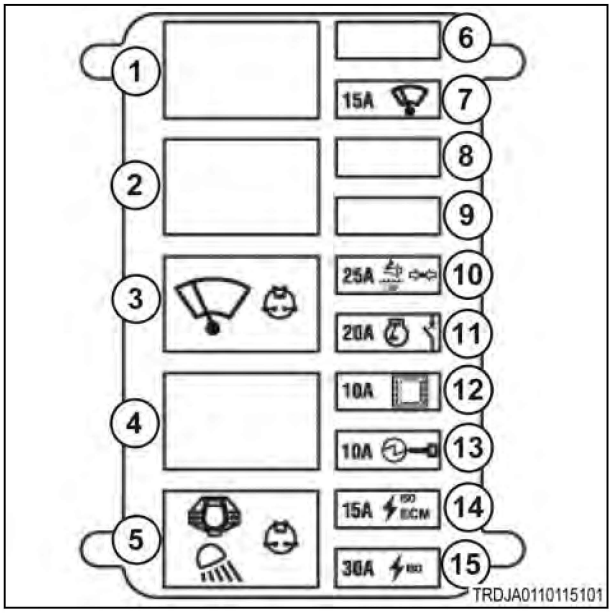

Fig. 5

4.3.5 Fuse relay block two

Fuse / relay block two		
Item	**Relay**	**Description**
1	35 Amp	Neutral start relay
2	35 Amp	Horn relay
3	35 Amp	ISO power relay
4	35 Amp	ISO ECU relay
5	35 Amp	ECU relay
Fuse / relay block two - ECU relay power		
Item	**Fuse**	**Description**
6	Not used	
7	Not used	
8	Not used	
9	Not used	
10	10 Amp	GPS
11	10 Amp	Armrest
12	10 Amp	Dash
13	20 Amp	Bottom light module
14	20 Amp	Bottom light module
15	20 Amp	Top light module

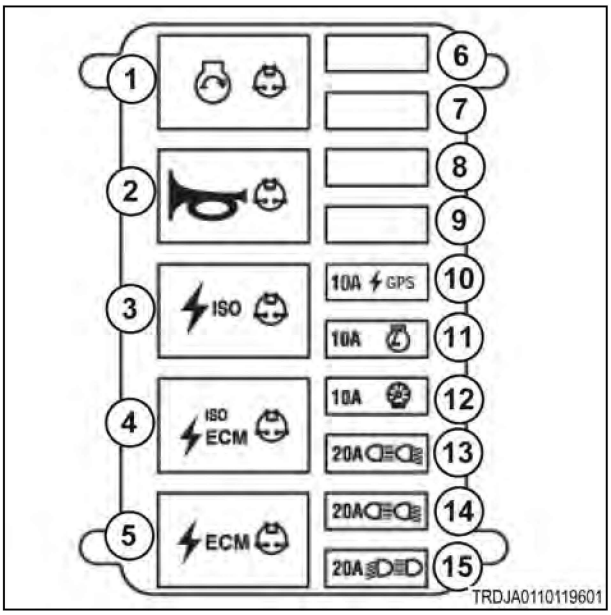

Fig. 6

4.3.6 Relay and fuse panel for chassis

NOTE: *The panel is on the right-hand side of the machine.*

Relays	Fuses
Engine switched power	Hood LH flood lights
	Hood LH flood lights
DEF Heater	Waste gate 2
	After-run ground
Waste gate, EGR, Nox sensor	After-run ground diode
Hood LH flood lights	Nox sensors

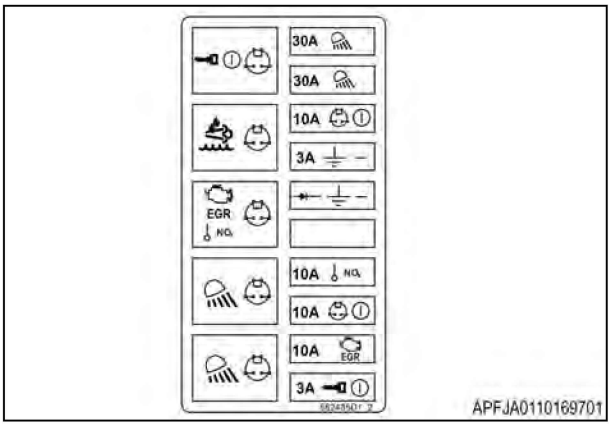

Fig. 7

Relays	Fuses
	Waste gate 1
Hood LH flood lights	EGR
	Key-switched power

4.3.7 Main fuse

The two main fuses for the cab power and the alternator are located inside the frame rail.

(1) Alternator, 300 Amps

(2) ECM, Starter relay and Auxiliary Relay, 100 Amps

(3) Cab stud, 175 Amps

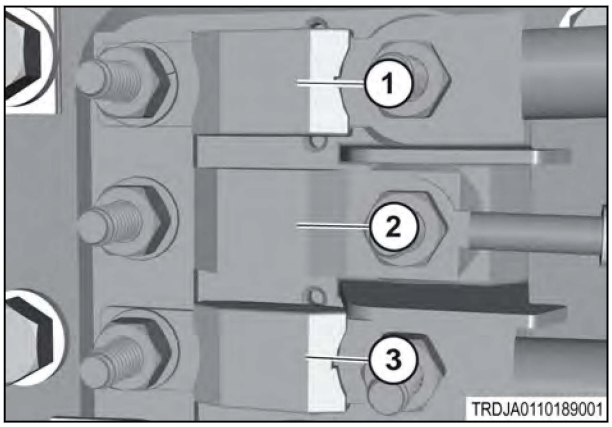

Fig. 8

4.4 Engine

4.4.1 Checking the engine oil level

WARNING:
Hot oil and components can cause personal injury. Do not let hot oil or components to touch skin.

IMPORTANT:
Do not over fill or under fill the engine with oil. Either condition can cause engine damage.

Procedure

1. Park the machine on a solid, level surface. Stop the engine, apply the park brake, and take the key with you.
2. Let the oil cool for five minutes.
3. Remove the engine oil dipstick (1) while the engine is stopped.

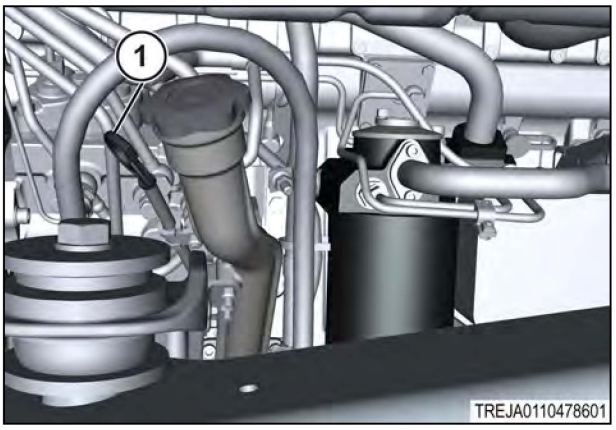

Fig. 9

4. Make sure the oil level is within the operating range (1) between the two notches.

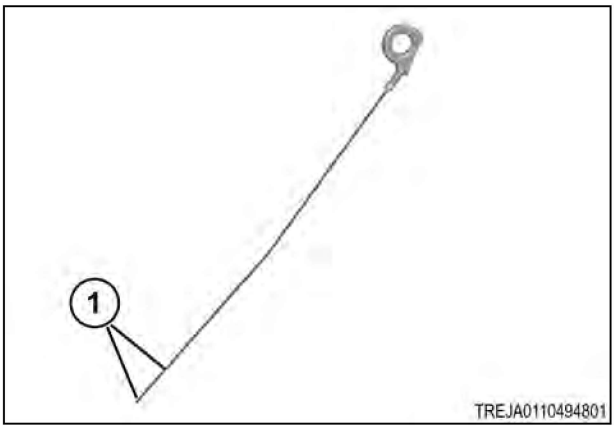

Fig. 10

5. If the engine oil level is low remove the oil fill tube cap (1) and add engine oil.
   See the specifications for the type of oil.
6. Add engine oil until the engine oil level is in the operating range.
7. install the engine oil dipstick.
8. Install the oil fill tube cap.
9. Start and run the engine for five minutes, checking for leaks.
10. Turn the engine off after five minutes and check that the engine oil level is within the operating range on the engine oil dipstick. Add engine oil as necessary.

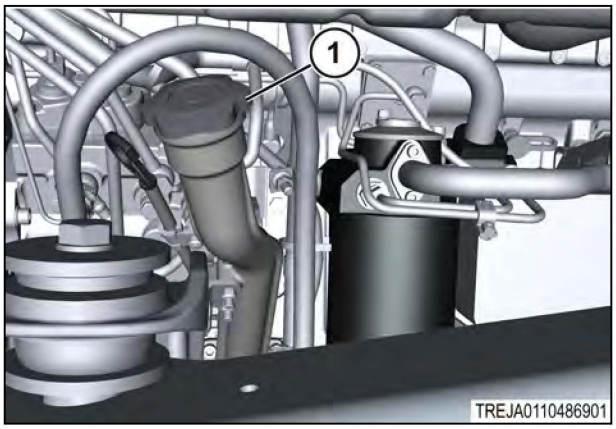

Fig. 11

4.4.2 Changing the engine oil and oil filter

WARNING: Hot components can burn.

Severe personal injury can result.

Let the engine and components cool before doing maintenance.

IMPORTANT:
Do not over fill or under fill the engine with oil. Either condition can cause engine damage.

Contain all fluids during inspection, maintenance, testing, adjustment, and repair of the machine. Before opening or disassembling any component containing fluids, prepare to contain fluids by having the correct containers available. Discard fluids according to local regulations and laws.

Procedure

1. Park the machine on a solid, level surface. Stop the engine, apply the park brake, and take the key with you.
2. Let the engine cool for five minutes.
3. Remove the hardware (1) and the cover (2) from the deflector under the engine.

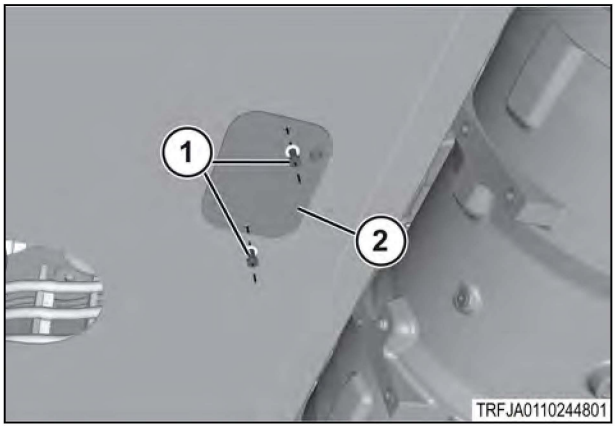

Fig. 12

4. Remove the cap (1) from the no spill quick drain.
5. Install the oil drain adapter and drain the oil into the correct container.
6. Remove the oil drain adapter and store in the cab.
7. Install the cap to the no spill quick drain.

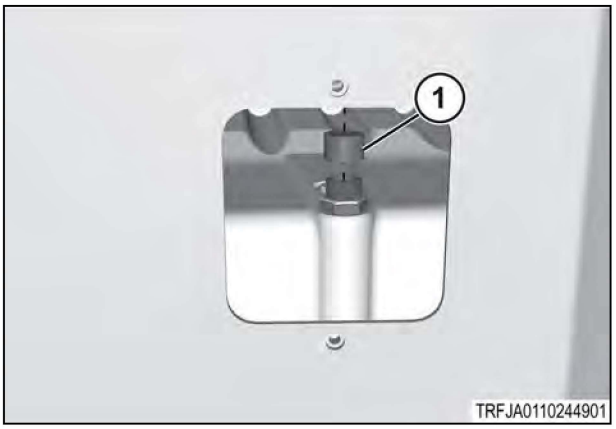

Fig. 13

8. Clean the area around the oil filter (1).
9. Remove the oil filter from the oil filter base.
10. Clean the sealing surface area on the oil filter base. Make sure to remove any oil filter seal.
11. Apply a thin layer of clean engine oil to the seal on the new engine oil filter.
12. Install the new oil filter.

    NOTE:
    The engine warranty will become void unless genuine AGCO oil filters are used.
13. When the oil filter seal contacts the oil filter base, tighten the oil filter elements by an additional 270 degrees (3/4 of a turn).
14. Wipe off any oil off the outside of the oil filter.
15. Remove the oil fill tube cap (1).
16. Add oil until the engine oil level is within the operating range on the dipstick.

    See the specification for the correct type and quantity of engine oil.
17. Install the oil fill tube cap.
18. Start the engine and run for five minutes. Check for leaks.

    Do not increase the engine speed.
19. Turn the engine off and check that the engine oil level is still within the operating range on the dipstick. Add engine oil as necessary.

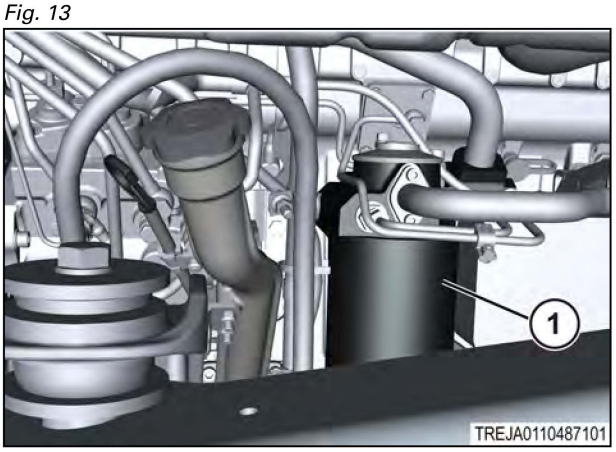

Fig. 14

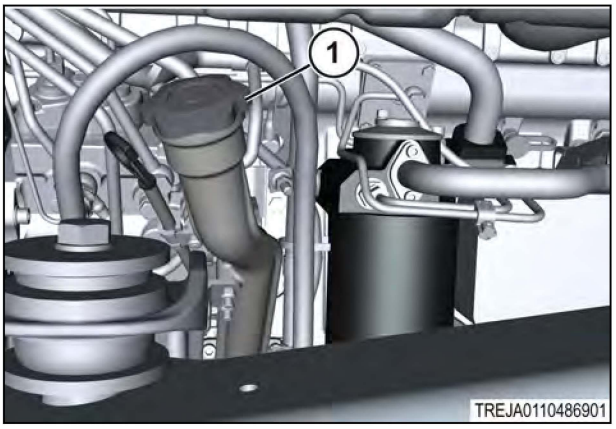

Fig. 15

4.4.2.1 Inspecting used filters

Use a filter cutter to cut the filter element open (1). Spread apart the pleats and inspect the element for metal and for other debris. Too much debris in the filter element can show a possible failure.

If there are small amounts of debris in the filter element, cause can be from friction and by normal wear. See your dealer to arrange for more analysis if an excessive amount of debris is found.

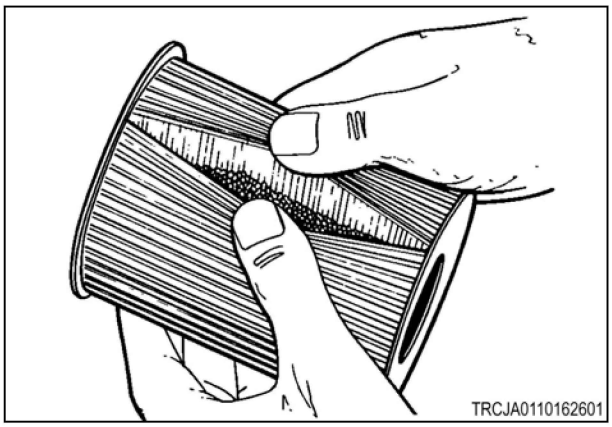

Fig. 16

4.4.3 Engine oil sample port

The engine oil sampling is the best procedure to monitor the condition of the oil in the machine. Port (1).

See the dealer for sampling containers and procedures.

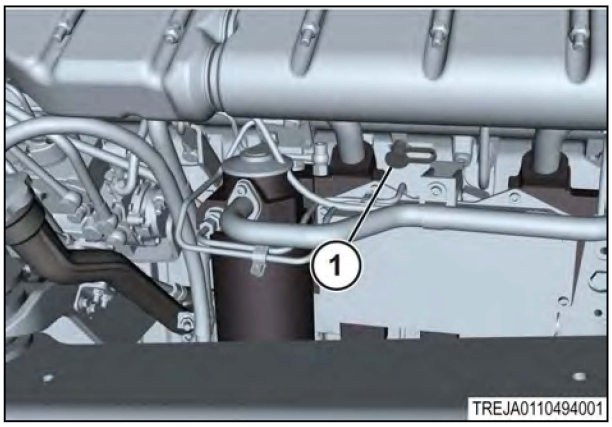

Fig. 17

4.4.4 Engine belts

IMPORTANT: *Make sure that the engine cannot be started during belt replacing. Disconnect the battery before doing this job.*

The belt tensioners (1) tighten the belts automatically during the operation.

Check the belt visually. Change a worn, oily or damaged belt. (See engine operation and maintenance manual).

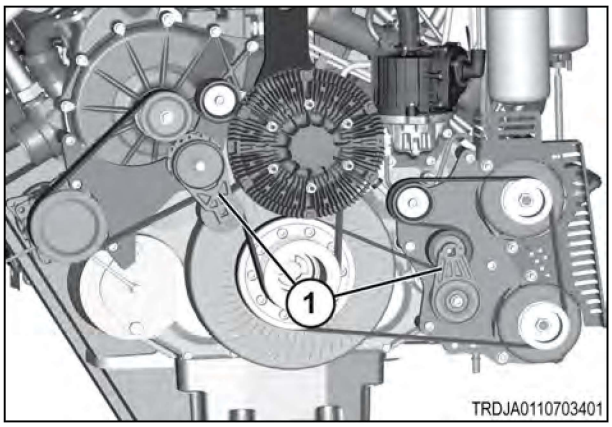

Fig. 18

4.4.5 Replacing the engine air filter

WARNING:
Chemical remains can be present in dirt on the filter elements. Do not breathe the dust. Wear the gloves and the respiratory protection while servicing the filter elements.

IMPORTANT:
The filter no longer has a warranty, once the filter is cleaned.

NOTE:
Never try to clean a safety filter. Replace the safety filter after three primary filter change outs.

Procedure

1. Unfasten the straps (1), and remove the air cleaner cover (2).
2. Check the air cleaner service indicator (3) every day.

   NOTE:

   Indicator is preset by manufacturer to show when service is required. Reset the indicator after service by pushing the top reset button.
3. Check the rubber elbows and the hose clamps on the air intake system every day.

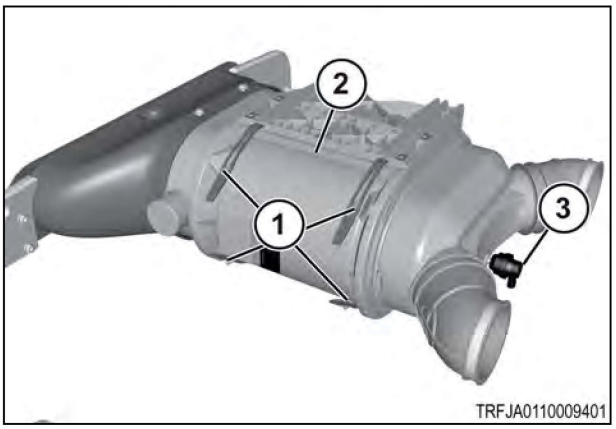

Fig. 19

4. Replace the air filter element (1) with a new element if damaged.
5. Replace the air filter element if the gaskets are damaged or missing.
6. Replace the air filter element with a new element every year.

   IMPORTANT:
   Remove the air filter element, only if being replaced. Replace the air filter when dirty. Do not clean filter.
7. Install the air filter element.

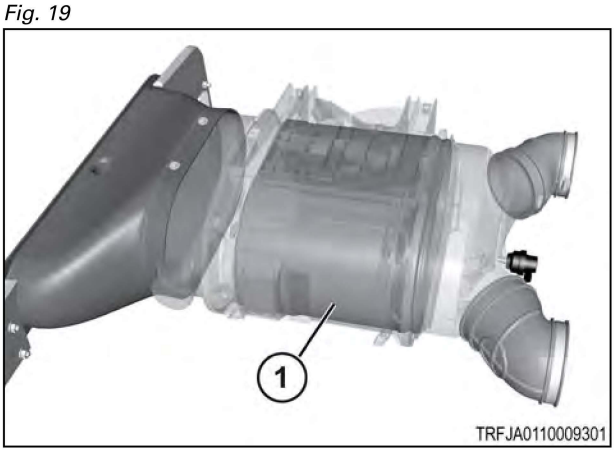

Fig. 20

4.4.6 Engine temperature

The engine wear is greatest when the engine is running cold.

Warm up the engine quickly with a light load for a couple of minutes after starting.

Do not load the engine heavily, and the rotation speed must not exceed 2000 rpm when the engine coolant temperature is below 50 °C (122 °F) .

4.4.7 Opening the engine cover

1. To open the engine cover, pull slowly outward on the latch (1).

2. Lift and release the rubber strap (2) from the engine cover.

Release the latches and the rubber straps on the other side of the machine.

3. Use the handle (3) to raise the engine cover.

Fig. 21

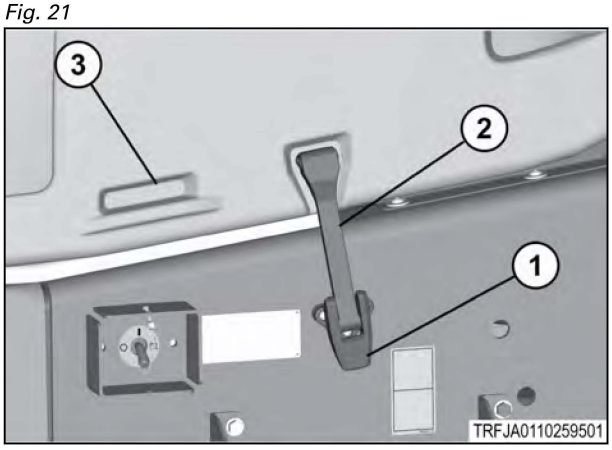

Fig. 22

4.5 Fuel system

4.5.1 Filling the fuel system

Before starting the procedure

WARNING: Explosion hazard.

Ultra Low Sulfur Diesel (ULSD) poses a greater static ignition hazard than earlier diesel formulations with higher sulfur content.

Consult with your fuel or fuel system supplier to ensure the delivery system is in compliance with fueling standards for proper grounding and bonding practices.

IMPORTANT: *The removal of sulfur and other compounds in ULSD fuel decreases its conductivity and increases its ability to store static charge. Refineries may have treated the fuel with a static dissipating additive. However, there are many factors that can reduce the effectiveness of the additive over time. Static charges can build up in ULSD fuel while it is flowing through fuel delivery systems. Static electricity discharge when combustible vapors are present could result in a fire or explosion. Therefore, it is important to ensure that the entire system used to refuel your machine (fuel supply tank, transfer pump, transfer hose, nozzle, and others) is properly grounded and bonded. Consult with your fuel or fuel system supplier to ensure the delivery system is in compliance with fueling standards for proper grounding and bonding practices.*

1. Clean the filler cap (1) and the adjacent area.
2. Lift the lever.
3. Rotate the lever counterclockwise.
4. Remove the filler cap.

   Do not try to rotate the entire cap to remove. The cap disengages from the fuel tank only by lifting and rotating the lever.

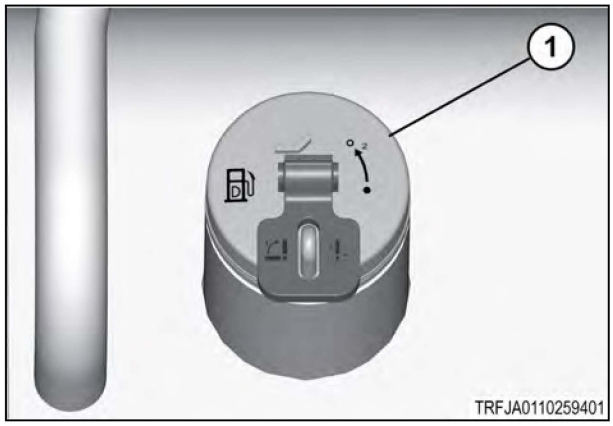

Fig. 23

4.5.2 Prevent static discharge when fueling

Ultra-Low Sulfur Diesel supplies more of a static ignition hazard than the earlier diesel formulations. Static dissipation additives to reduce this hazard can lose the ability to perform over time and other changing conditions. To prevent death or serious injury from fire or explosion, follow the correct grounding and bonding practices for all refueling system components (supply tank, transfer pump, hose, nozzle, and others), as specified by the fuel or fuel system supplier.

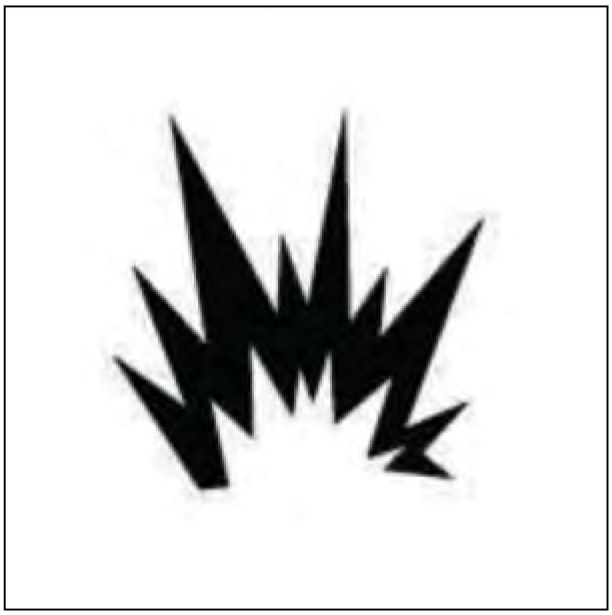

Fig. 24

4.5.3 Changing the prefilter and the fuel filters

WARNING: *Fuel leaked or spilled on to hot surfaces or electrical components can cause a fire. To help prevent possible injury, turn the start switch off and remove the key when changing the fuel filters or water separator element. Clean up fuel spills immediately.*

CAUTION:
Escaping fluid under pressure can penetrate skin causing serious injury. Release pressure before disconnecting fuel or other lines. Tighten all connections before applying pressure. Keep hands and body away from pin holes and nozzles which eject fluids under high pressure. Use a piece of cardboard or paper to search for leaks. Do not use your hand.

IMPORTANT: *Care must be taken to be sure that the fluids are contained during performance of inspection, maintenance, testing, adjusting, and repair. Be prepared to collect the fluid with suitable containers before opening any compartment or disassembling any component containing fluid. Dispose all fluids in accordance with local regulations and mandates.*

NOTE: *Replace the fuel filter elements at 800 hour intervals or if indicated by error code.*

NOTE: *See the engine operator manual for more complete information.*

IMPORTANT: *The engine warranty is valid only when original AGCO Power Diesel fuel filter elements are used.*

Procedure

1. Clean the fuel filters and adjacent area.
2. Close the fuel valve (5).
3. Drain prefilter (2).
4. Disconnect prefilter water detector connector (1).
5. Turn filter element (2) counterclockwise and remove element from mounting bracket. Collect fuel into a applicable container.
6. Remove the water detector (3) from the prefilter bottom end.
7. Remove the main filter (4) in a similar way.
8. Fasten the water detector (3) to the new prefilter bottom end.
9. Lubricate the filter element o-ring seal (6) with clean fuel.
10. Fill the outer shell of the filter element (7) with clean fuel (8).
11. Turn filter element on the mounting bracket.
12. Connect the water detector connector (1).
13. The main filter (4) is assembled in a similar way.
14. Open the fuel valve
15. Prime the fuel system. See fuel system priming.
16. Start the engine and make sure there are no leaks.

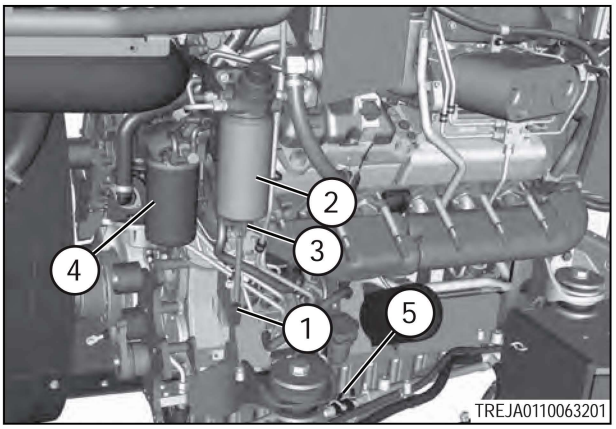

Fig. 25



Fig. 26

4.5.4 Priming the fuel system

IMPORTANT: *Do not turn the engine for more than 30 seconds. Let the starter motor cool for two minutes before starting again. Keep the engine rpm low until oil pressure is correct or damage to the turbocharger can result.*

IMPORTANT: *Do not loosen the fuel lines at the fuel manifold. The fittings can be damaged and/or a loss of priming pressure can occur when the fuel lines are loosened.*

Procedure

1. Make sure there is fuel in the tank. Make sure the fuel tank supply valve (1) is open.

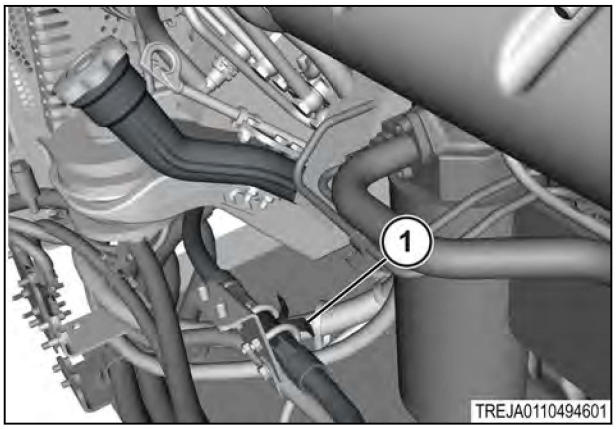

Fig. 27

2. Loosen the plug (2) to let air release from the fuel lines. Make sure the plug is open enough or priming the pump will not work.

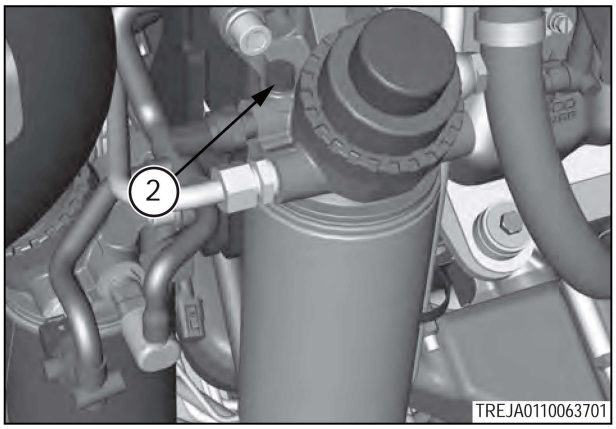

Fig. 28

3. Operate the plunger (1) until a strong pressure is felt, and the fuel is leaking out of the plug. This procedure requires many strokes.
4. Tighten the plug (2).
5. Press down the plunger six more times to build fuel pressure.
6. Start the engine. If the engine does not start, try procedure again. If the engine runs rough, run the engine at low idle speed until the engine runs smoothly.

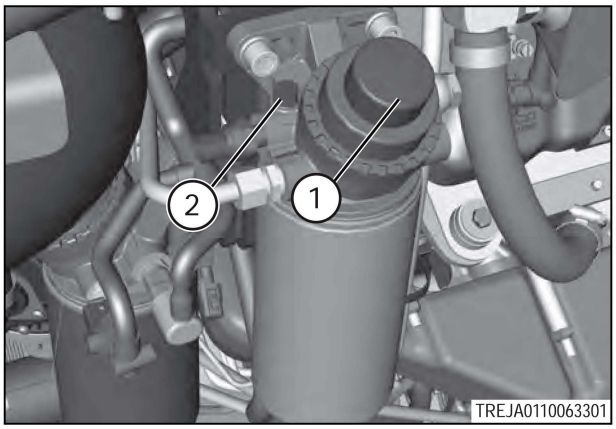

Fig. 29

4.5.5 Draining water and sediment from the fuel tank

IMPORTANT:
Make sure to contain all fluids during inspection, maintenance, testing, adjusting, and repair of the machine. Contain the fluids with the correct containers before opening any compartment or disassembling any component containing fluids. Discard all fluids according to laws, regulations, and mandates.

Procedure

1. Park the machine on a hard, level surface.
2. Stop the engine and take the key with you.

3. Fasten a hose to each drain valve (1).

4. Prepare the correct drainage containers. Put the ends of the hoses into the drainage containers.

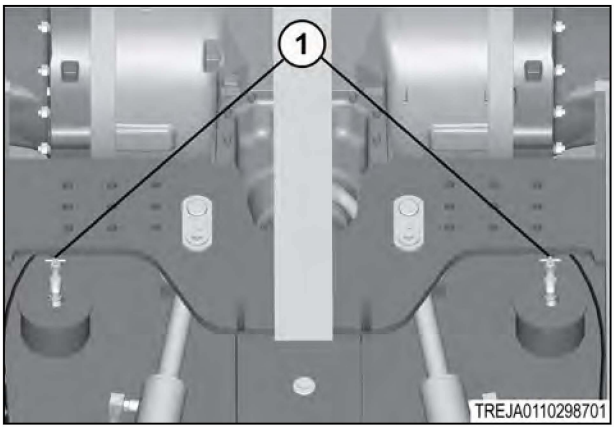

Fig. 30

5. Open the drain valve with the handle (1) to let the water and the sediment drain into the containers.

6. Close the drain valve when clean fuel drains out of the fuel tank.

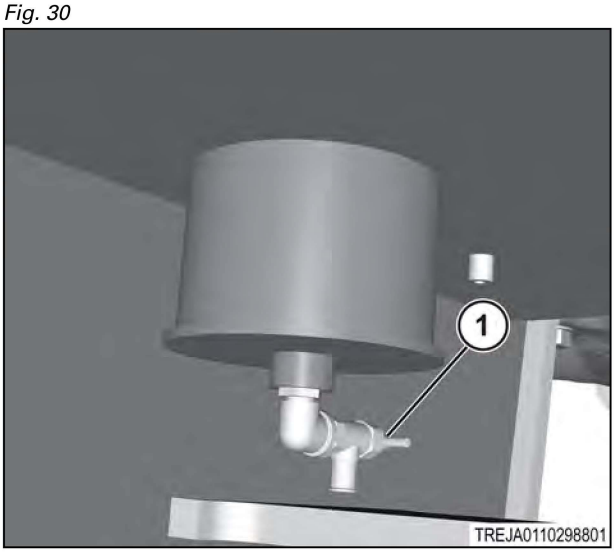

Fig. 31

4.5.6 Fuel cap

WARNING: *Personal injury or death can result from a fire. Fuel leaked or spilled on hot surfaces or electrical components can cause a fire. Cleanup all leaked or spilled fuel. Do not smoke while working on fuel system. Turn disconnect switch off or disconnect battery when changing fuel filters*

The fuel system uses a vented fuel cap.

4.5.7 Fuel tank breather

The fuel system uses a fuel tank breather. The fuel tank breather (1) is on top of the fuel tank. The fuel tank breather has a 2 micron filter element. The fuel tank breather has an air out cracking pressure of 35 kPa (5 psi). The fuel tank breather has an air in cracking pressure of 3 kPa (0.5 psi).

The fuel tank breather must be changed annually or after 1000 hours, whichever comes first.

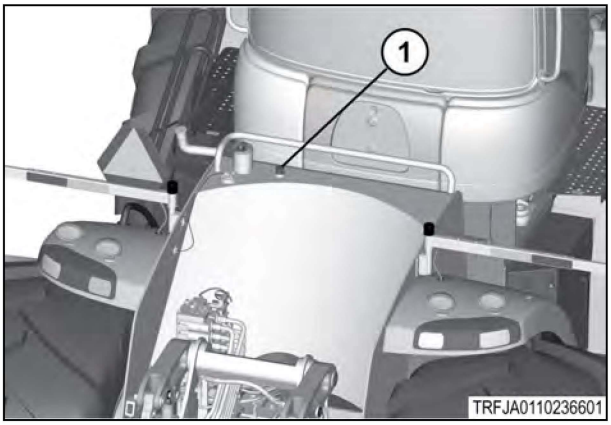

Fig. 32

4.6 SCR system

4.6.1 Selective catalytic reduction (SCR) System

These general instructions need to be followed:

- The selective catalytic reduction (SCR) system must not be contaminated by diesel fuel, oil, or other hydrocarbons. Damage to the system will result.

  If any part of the system has been in touch with such substances, the part must be cleaned very carefully. If you cannot be sure the part is clean from diesel, it must be replaced.

  IMPORTANT: *The selective catalytic reduction (SCR) system tolerates only small amounts of impurities. If there is doubt the diesel exhaust fluid (DEF) tank has been contaminated with diesel fuel, the engine must not be started before emptying and cleaning the diesel exhaust fluid (DEF) tank, supply module (including new main filter), dosing module and the diesel exhaust fluid (DEF) lines. See the engine operator/service manual.*
- Do not use high pressure water to wash the selective catalytic reduction (SCR) components.
- As the diesel exhaust fluid (DEF) deposits may cause corrosion, rinse deposits off with low pressure water.
- Always pay attention to cleanliness. Do not unnecessarily open the hydraulic or electrical connectors, in order to avoid dirt and diesel exhaust fluid (DEF) entering connectors.
- Using the compressed air for diesel exhaust fluid (DEF) lines, cleaning is not allowed, unless air is oil free. Oil can damage the system.
- After the engine shutdown, the remaining diesel exhaust fluid (DEF) in system is automatically emptied back to the diesel exhaust fluid (DEF) tank. During the emptying process, continuous power supply must be provided for EEM4 electronic control unit (ECU). Pump performing after run is powered through the EEM4 electronic control unit (ECU), and will run without the key on or battery disconnect switch on.

WARNING: *Diesel exhaust fluid (DEF) is pressurized when the system is in operation. Allow pressure decrease in the system before any maintenance actions.*

4.6.2 Supply module

WARNING: *DEF is pressurized when system is in operation. Allow pressure to decrease in the system before any maintenance actions.*

IMPORTANT: *The SCR system tolerates only a small amount of impurities. If there is doubt that the DEF tank has been contaminated with diesel fuel, engine must not be started before emptying and cleaning DEF tank, supply module (including new main filter), dosing module and DEF lines. See Engine Operator/ Service manual for removing and installing the supply module.*

Access to the filter is below the supply module (1).

Change the supply module filter 1200 hours or annually, unless DEF tank has been contaminated. The supply module is under the left-hand rear side of cab.

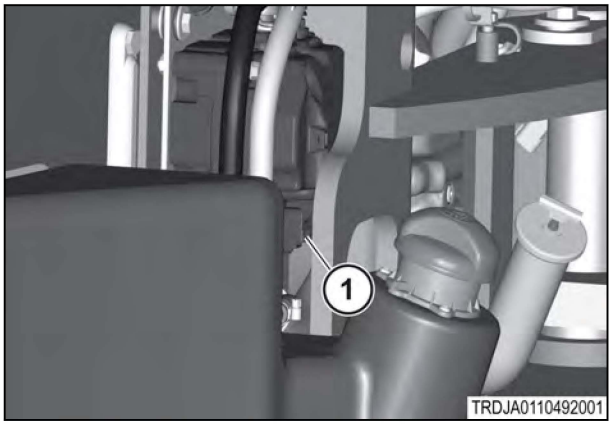

Fig. 33

4.6.3 Filling a diesel exhaust fluid tank

NOTE:
Keep the tools and the equipment clean to prevent the tank contamination.

IMPORTANT:
Even small amounts of diesel fuel in DEF tank can damage the selective catalytic reduction (SCR) system.

IMPORTANT:
Do not mix the DEF with other substances. Substances other than DEF can damage the SCR system.

Procedure

1. The DEF tank fill cap is blue displaying DEF and the symbol.
2. Remove the DEF fill cap (1) and add the DEF solution through the fill opening.
3. Remove the drain plug (2) to empty the DEF tank. Store the DEF in an approved DEF container.

   NOTE:
   For cold or long term machine storage, drain the DEF tank.

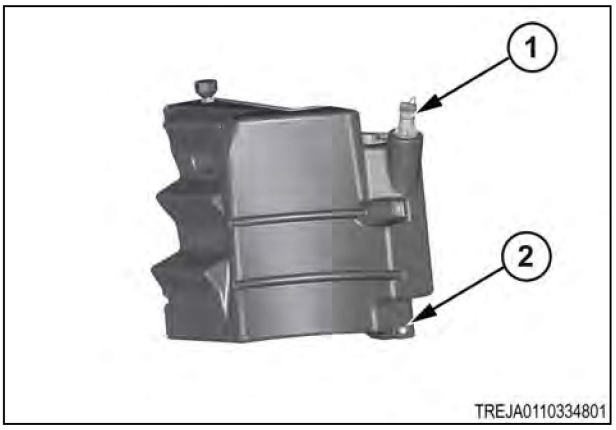

Fig. 34

4.6.4 DEF storage and shelf life

The following table provides information for the Diesel Exhaust Fluid (DEF) shelf life as a function of temperature:

Constant ambient temperature	Minimum shelf life - months
less than or equal to 10°C (50° F)	36
less than or equal to 25°C (77° F) (Note 1)	18
less than or equal to 30°C (86° F)	12
less than or equal to 35°C (95° F)	6
more than 35°C (95° F)	(Note 2)
NOTE: *Main factors taken into account to define shelf life in this table are ambient storage temperature and initial alkalinity of DEF. The difference in evaporation between vented and non-vented storage containers is an additional factor.*	
Note 1: To prevent decomposition of DEF, prolonged transportation or storage above 25°C (77° F) must be avoided.	
Note 2: Important loss of the shelf life: check every batch before use.	

DEF must only be stored in original or DEF approved containers.

The crystallization point or freezing point of DEF is -11° C (12.2° F).

4.7 Cooling system

4.7.1 Cleaning the cooling cores

WARNING: *Cooling system operates under pressure which is controlled by the radiator pressure cap. Removing the cap while system is hot can allow escape of hot coolant and steam, causing serious burns. Before removing the radiator cap, let system cool. Use a thick cloth and turn the radiator cap slowly to first stop to let pressure escape before fully removing the cap. Avoid contact with the coolant.*

CAUTION:
When cleaning or blowing out the debris, be careful not to bend the fins, as this can effect the operation of the cooling system.

Procedure

1. Stop the engine, apply the park brake, and take the key with you.
2. Unhook the engine cover latch on both sides, and raise the engine cover to get access to the cooling cores.
3. Turn the levers (1) counterclockwise on both sides of the condenser core.
4. Open the condensor core to remove debris.
5. Use air or water to clean out the section.

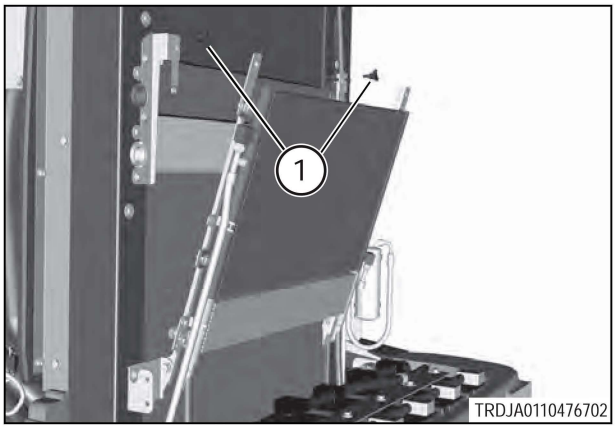

Fig. 35

4.7.2 Water valve shutoff

WARNING: *Hot Surface - Prevent contact with hot surfaces. Exhaust piping and engine components become hot during engine operation and cool slowly after engine shutdown. Any contact with hot surfaces can cause dangerous burns.*

The manual water shutoff valve is located under the rear housing cover in the back of machine (1). Close the shutoff valve to stop the flow of hot water to the heater core. By closing the shutoff valve, the air conditioner system cools the cab better. Close the shutoff valve by turning the lever clockwise, when the cab heater is no longer necessary. Open the valve by turning counterclockwise, when the cab heat is necessary.

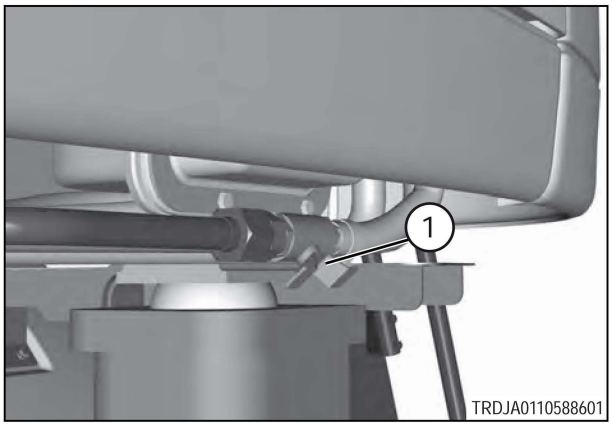

Fig. 36

4.7.3 Checking the engine coolant level

CAUTION:
Do not remove the coolant reservoir cover cap (1) when the engine is hot. Do not add the coolant to an overheated engine.

NOTE: *The cooling system in the machine has a factory fill of standard coolant.*

A coolant level sight gauge is located on the coolant reservoir.

The coolant level must be filled up to at least the full cold mark (2).

If the engine coolant level is low, check the system for leaks. As needed, repair the cooling system.

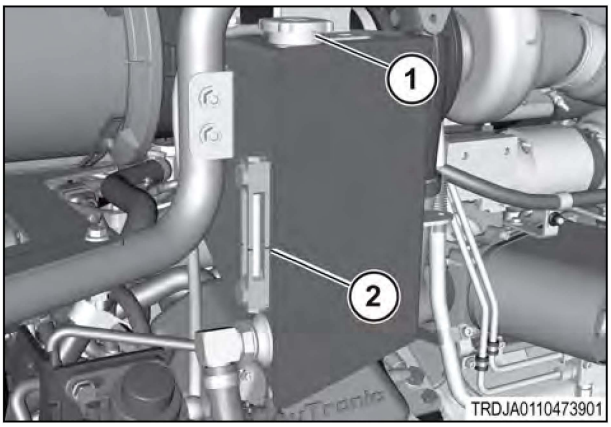

Fig. 37

4.7.4 Coolant sample

Coolant sample is the best way to monitor condition of coolant in the machine. Port (1).

See your dealer for sample containers and procedures.

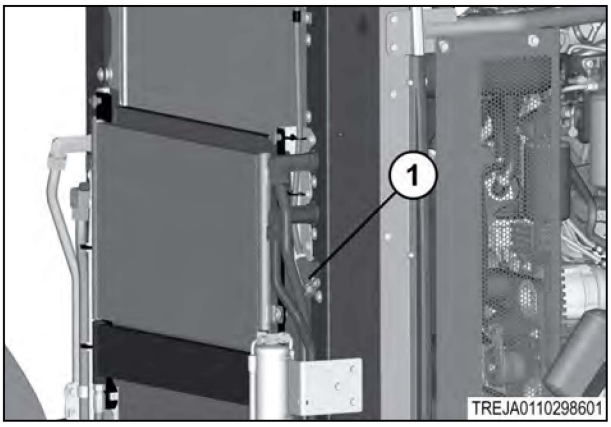

Fig. 38

4.7.5 Coolant system fluid

NOTE: *If these conditions occur, clean and flush the coolant system.*

Change the engine coolant more frequently if finding any of the following conditions:

- The cooling system is heavily contaminated.
- The engine overheats.
- Observe foaming in the expansion tank.
- The engine oil cooler has failed and the oil is in the coolant.
- The fuel has contaminated the cooling system.

IMPORTANT: *It is important to replace the water temperature thermostat to prevent unexpected failure. This is a good preventive maintenance practice that reduces chances of unscheduled downtime.*

4.7.6 Cooling system additives

There are several types of additives available for this machine. See your dealer or engine operator's manual for approved additives and application guidelines.

4.7.7 Draining the engine coolant

Procedure

1. Contain all fluids during the performance of inspection, maintenance, testing, adjusting, and repair of the machine. Prepare to contain fluids with correct containers before opening any compartment or disassembling any component containing fluids. Discard all fluids according to local regulations and laws.
2. Park the machine on a hard, level surface.
3. Stop the engine. Let the engine and the radiator become cool.
4. Slowly loosen the filler cap (1) to release pressure.
5. Remove the filler cap.
6. Inspect the filler cap gasket, and replace if damaged.

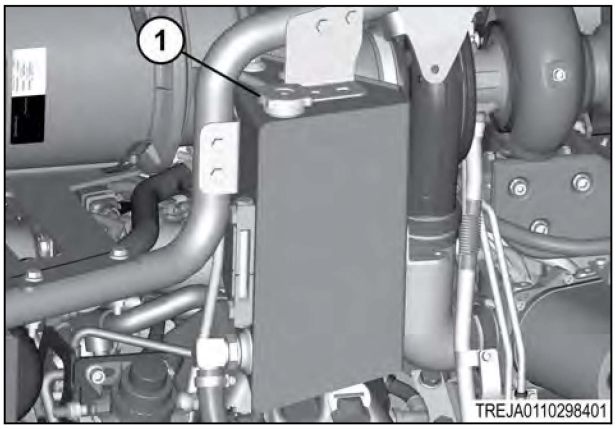

Fig. 39

7. Remove access plate (1).
8. Route a hose through access hole and connect the hose to the drain valve.
9. Put the container under the end of the hose.

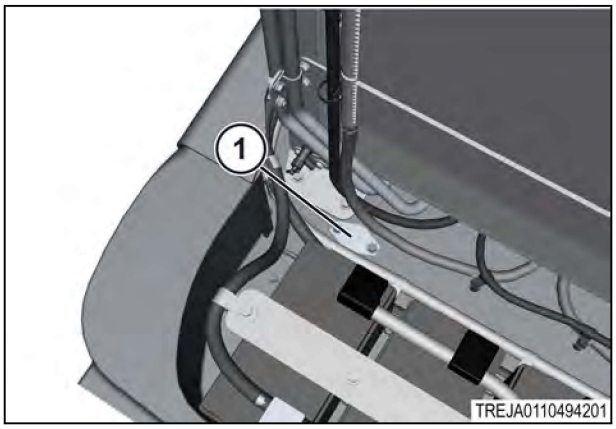

Fig. 40

10. Turn the valve (1) counterclockwise to open.
11. . When the coolant is drained completely, turn the valve clockwise to close.
12. Remove the hose.

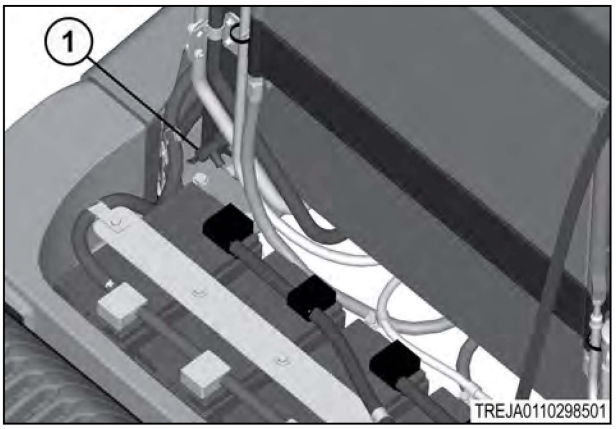

Fig. 41

4.7.8 Flushing the cooling system

Procedure

1. Fill the cooling system with clean water and a five to ten percent concentration of cooling system cleaner.
2. Install the filler cap (1).
3. Start and run the engine for 90 minutes.
4. Stop the engine and let the engine cool. Loosen the filler cap to release the pressure.
5. Drain the water and flush the cooling system with water until draining the water is transparent.
6. Fully drain the cooling system and close the drain valve.

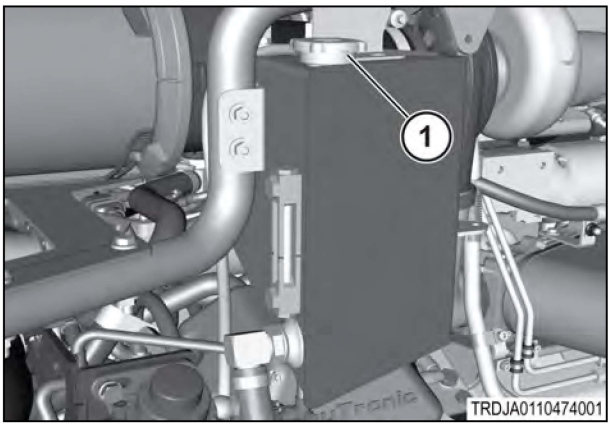

Fig. 42

4.7.9 Refilling the cooling system

Procedure

1. Add the coolant solution by removing the filler cap (1).
   Consult the dealer for information about diesel engine antifreeze/coolant.
2. Check the coolant level on the sight gauge (2). Keep the coolant level at or above the full cold mark.
3. Start the engine.
4. Operate the engine until the coolant reaches normal operating temperature, and until the coolant level stabilizes.
5. After the engine has cooled, check the coolant level sight gauge. Keep the coolant lever at or above the full cold mark.

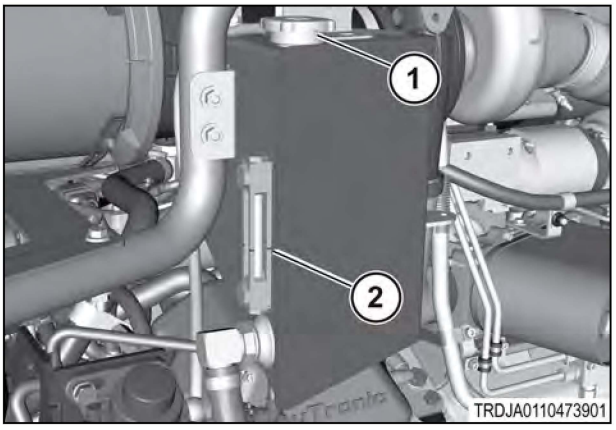

Fig. 43

4.7.10 Replacing the water temperature thermostat

Procedure

1. **IMPORTANT:**
   Clean the mating surface of the cylinder head, and the water temperature thermostat housing.
   Parts removed for clarity.

   Remove the bolts to remove the bracket (1). Loosen the hose clamps (2) around the hoses (3). Remove the bolts to remove the cover for the thermostat housing (4).

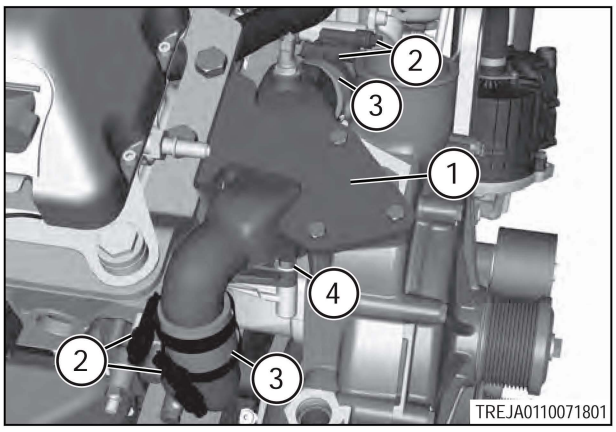

Fig. 44

2. Remove the water temperature regulator and gasket.

3. **NOTE:**
   Keep all the parts clean from contaminants. The contaminants can cause rapid wear and shortened component life.

   Replace the gaskets (3). Replace with a new gasket if worn or damaged.

4. Install the bolts to replace the cover to the housing.

5. Connect the hoses and tighten the hose clamps.

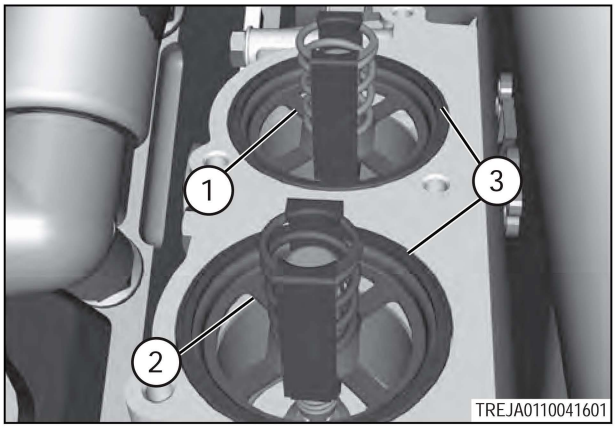

Fig. 45

6. Replace the bracket.

7. The top thermostat (1) opens at 82° C (180° F), and regulates the cooling system. The bottom thermostat (2) opens at 79° C (174° F), and regulates the cooling system.

4.8 Power train

There are two procedures for checking the power train fluid level. The first procedure is a daily check that lets the operator know that the machine is safe to operate. The second procedure is a more comprehensive check that needs to be completed every 400 hours of operation.

4.8.1 Checking the power train fluid level - daily

The power train requires the use of an SAE 10W30 hydraulic oil that meets the AGCO 821XL specification.

Procedure

1. Park the machine on a level surface when checking the fluid. Stop the engine, apply the park brake, and take the key with you.
2. Before starting the engine, check that the fluid level is visible in the sight gauge (1).
3. Do not start the engine if fluid level is not visible in the sight gauge. Add fluid until level is visible in the bottom of the sight gauge before starting the engine.

   See the information on adding power train system fluid.

   IMPORTANT:
   DO NOT overfill. An overfull system can make a system become too hot during high speed travel.

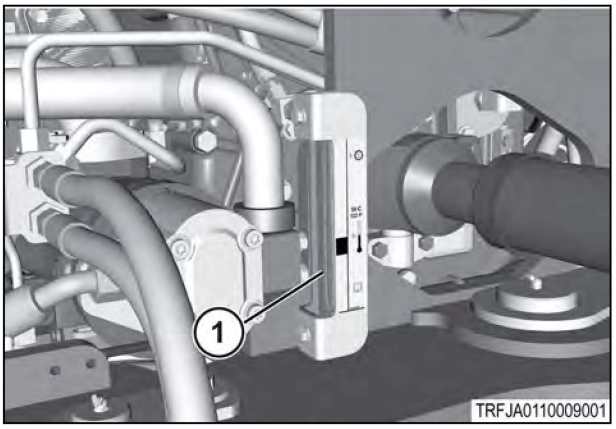

Fig. 46

4.8.2 Checking the power train system fluid level - 400 hours

The power train requires the use of an SAE 10W30 hydraulic oil that meets the AGCO 821XL specification.

Check the transmission oil every 400 hours or as needed because of leakage or repairs.

The transmission oil temperature must be 50° C (122° F) for checking the oil level. The transmission oil temperature is found on the Machine Management Center (MMC).

In cold temperatures, let additional time for the fluid to warm up. Driving the machine at low speeds 8 km/h (5 mph) to 13 km/h (8 mph) with no load will speed oil warm up.

Procedure

1. With the transmission oil at 50° C (122° F), start the engine. Let the engine run at 1800 rpm for 5 - 10 minutes while in PARK on a level surface.

   NOTE:
   If the machine was operating before checking, park the machine on a level surface. Operate the machine for an additional 5 - 10 minutes at 1800 rpm. This will let the oil levels become stable between the axles and the transmission. Make sure that the oil temperature remains at 50° C (122° F) at the end of this period.
2. Move the throttle lever to the idle position, and immediately turn the key to the off position.
3. Let the transmission oil level become stable for 5 minutes.

4. Check the transmission oil level.

   NOTE:
   The black range on the transmission oil level sight gauge (1) *indicates the correct oil level, 50° C (122° F).*

   Add oil only if the level is below the black range on the transmission oil level sight gauge by following the instructions for adding power train system fluid.

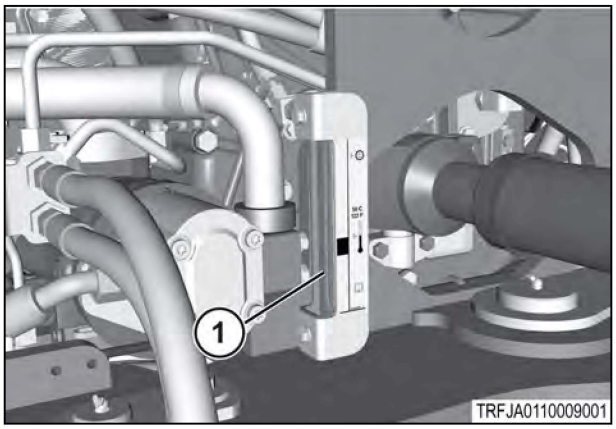

Fig. 47

4.8.3 Adding power train system fluid

Before starting the procedure

IMPORTANT:
Do not permit untrained personnel to add fluid to the transmission system.

Procedure

1. See the information on checking the power train system fluid level - 400 hours, to make sure that additional oil is needed.
2. Remove the lock (1) and oil fill cap (2) from the transmission oil fill tube.
3. Add 2 L (0.5 gal) of oil between each checking procedure.
4. Follow the checking the power train system fluid procedure to determine if oil level is correct.
5. Repeat steps 3 and 4 until the correct fluid level is in the black range of the sight gauge and when the oil is at 50° C (122° F).

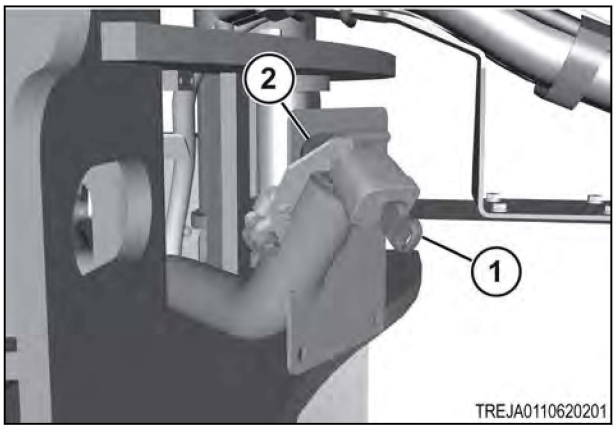

Fig. 48

   NOTE:

   - *By adding 3.8 L (1 gal) of fluid, the transmission fluid will raise approximately 16mm (5/8 in).*
   - *Do not add more than 5.7 L (1.5 gal) of oil.*

6. Install the oil fill cap and the lock on the oil fill tube to prevent accidental addition of oil.

4.8.4 Draining excess power train system fluid

NOTE:
Excess oil will be identified when oil temperatures increase dramatically during high speed travel. It is important that the excess oil is drained from the front and rear axles.

Contain all fluids during inspection, maintenance, testing, adjustment, and repair of the machine. Before opening or disassembling any component containing fluids, prepare to contain fluids by having the correct containers available. Discard fluids according to local regulations and laws.

Procedure

1. Stop the engine and apply the park brake.

2. Remove the drain plug (1) opposite the pinion shaft.

   NOTE: *Less than 14 kPa (2 psi) of air pressure will be present when opening the plug.*

3. Drain the oil into the correct container.

4. Drain each axle separately.

5. Let the axles drain for a minimum of 15 minutes to put the axles to the correct oil level.

   This works best when the oil is 50 °C (122 °F) or warmer.

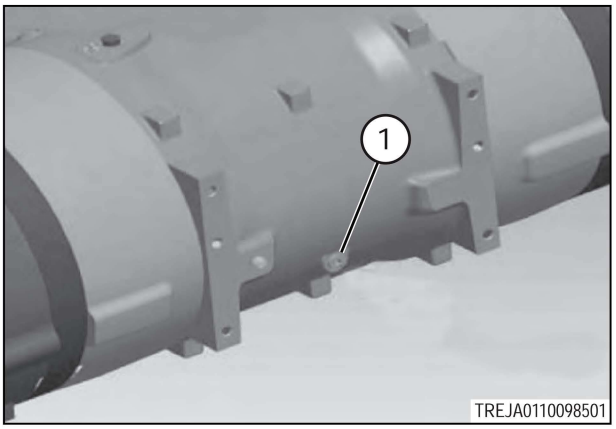

Fig. 49

6. After draining both axles, install the plugs and start the power train fluid level checking procedure from the beginning.

4.8.5 Changing the power train system fluid

WARNING:
Hot oil and hot components can cause personal injury. Do not let hot oil or hot components contact the skin.
The machine uses an isolated fluid circuit for the power train systems. The power train requires the use of an SAE 10W30 transmission/hydraulic oil that meets the requirements of the AGCO 821XL specification. The power train system operates the following operations:

- *Transmission control, cooling, and lubrication*
- *Axle cooling and lubrication*
- *Braking and differential lock activation (if equipped)*
- *Power take-off lubrication and control (if equipped)*

NOTE:
The power train holds approximately 185 L (48 gal) when completely empty. When changing the fluid, it is not possible to completely drain the powertrain. The amount drained will be approximately 170 L (45 gal).
.

NOTE:
Contain all fluids during inspection, maintenance, testing, adjustment, and repair of the machine. Before opening or disassembling any component containing fluids, prepare to contain fluids by having the correct containers available. Discard fluids according to local regulations and laws.

Procedure

1. Start and operate the machine for a period of five to ten minutes.

   This will let the machine warm up the oil.

2. Park the machine on a level surface when checking the fluid.

3. Stop the engine, apply the park brake, and take the key with you.

4. Remove the fill cap lock (1).

5. Slowly remove the fill cap (2).

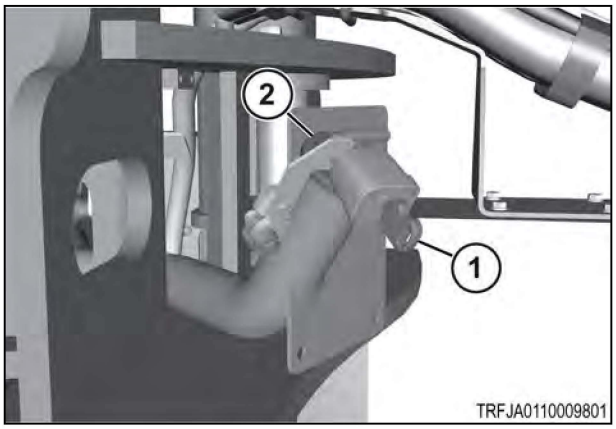

Fig. 50

6. Remove the transmission drain plug (1).

7. Let the oil drain into the correct container.

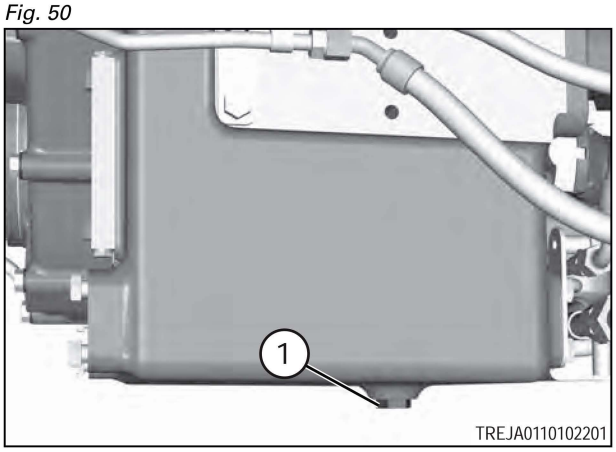

Fig. 51

8. Remove the five oil plugs (1) from the front axle. Let the oil drain into the correct container.

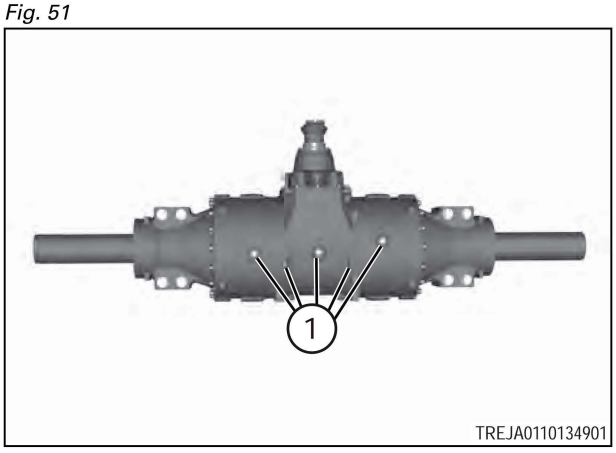

Fig. 52

9. Remove the five oil plugs (1) from the rear axle. Let the oil drain into the correct container.

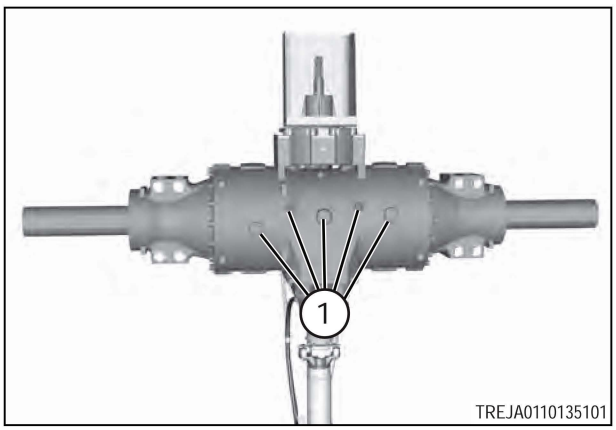

Fig. 53

10. Set an oil pan below the filters. When replacing the filters, a small amount of oil will be lost.

11. Remove the power train system filter (1).

12. Remove the high pressure brake filter (2).

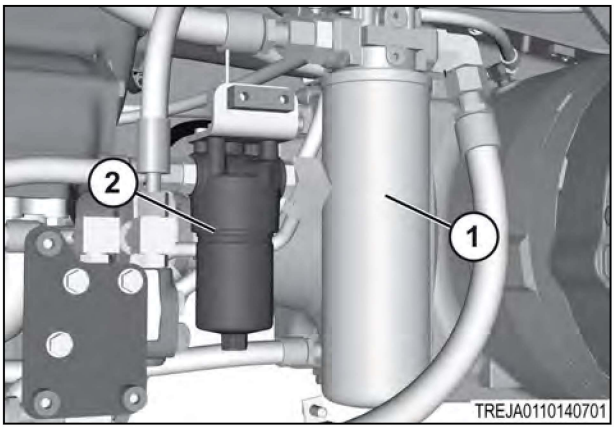

Fig. 54

13. Set an oil pan below the filter. When replacing the filter, a small amount of oil will be lost.

14. Remove the axle lubrication filter (1).

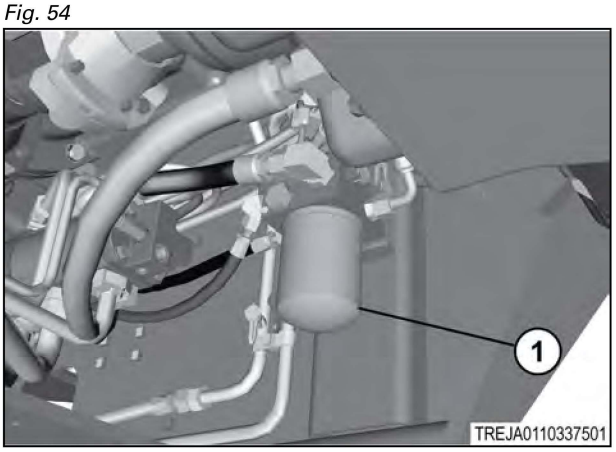

Fig. 55

15. Find the suction screen (1) at the front of the transmission.

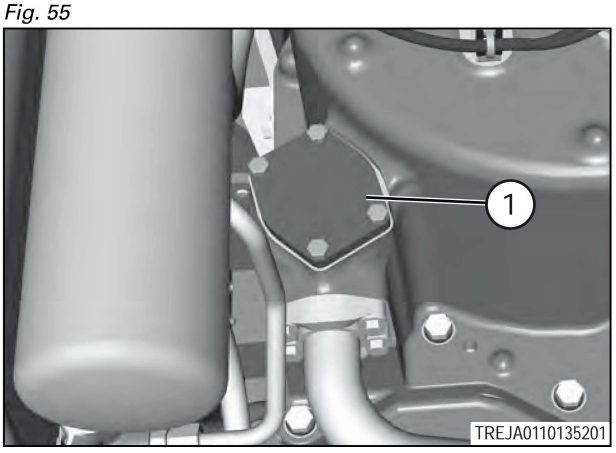

Fig. 56

16. Remove the mounting hardware (1) from the end cover (2).

17. Remove the suction screen (3) from the housing.

18. Wash the screen in a clean, nonflammable solvent and inspect for any damage.

19. Replace a damaged screen with a new screen.

20. Install the clean suction screen into the housing.

21. Install the end cover with the mounting hardware.

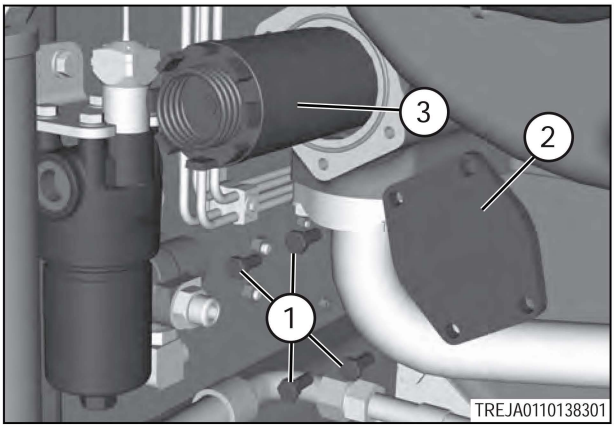

Fig. 57

22. Apply a thin layer of oil to the seal on the power train system filter (1) and high pressure brake filter (2).

23. Install the filters by hand.

24. When the filter seal contacts the filter base, tighten the filter elements by an additional 270 degrees.

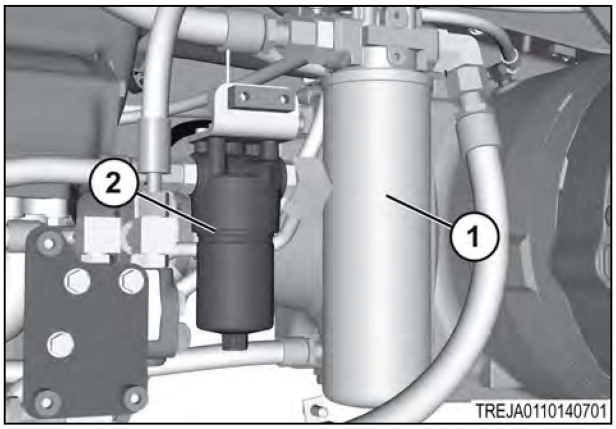

Fig. 58

25. Apply a thin layer of oil to the seal on the axle lubrication filter (1).

26. Install the filter by hand.

27. When the filter seal contacts the filter base, tighten the filter elements by an additional 270 degrees.

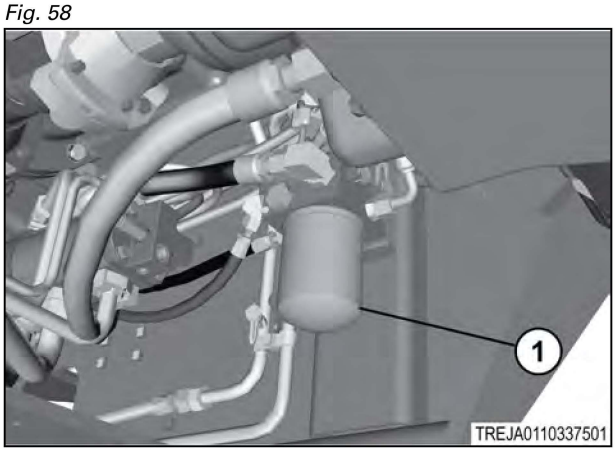

Fig. 59

28. Apply a thin layer of oil to the drain plugs (1) and install the five oil plugs to the front axle.

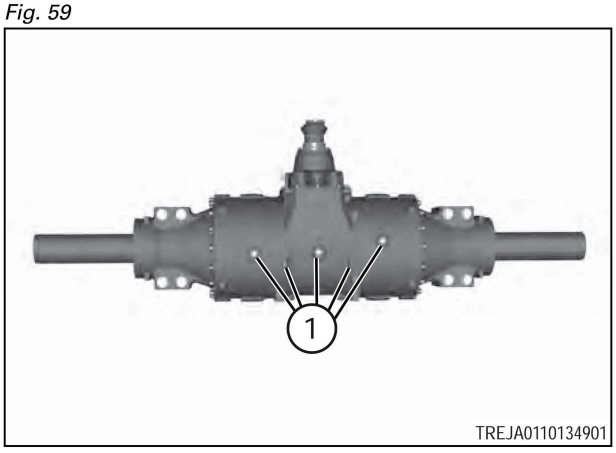

Fig. 60

29. Apply a thin layer of oil to the drain plugs (1) and install the five oil plugs to the rear axle.

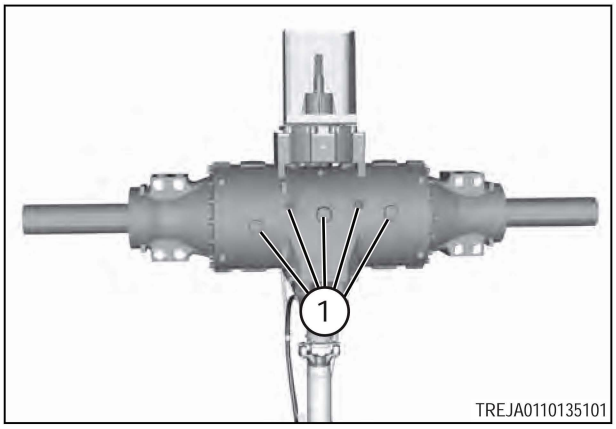

Fig. 61

30. Apply a thin layer of oil to the drain plug (1) and install the transmission drain plug (1).

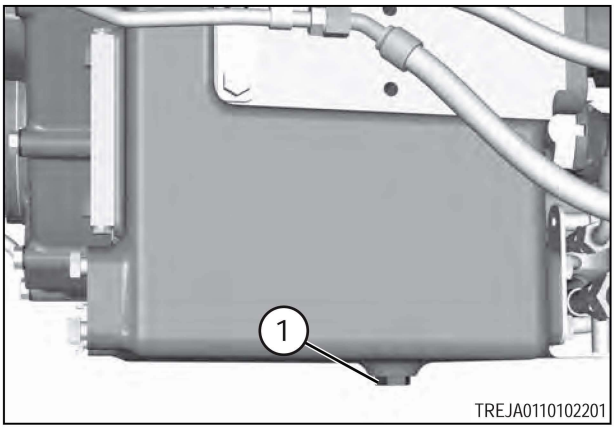

Fig. 62

31. Add SAE 10W30 transmission/hydraulic oil that meets the requirements of the AGCO 821XL specification through the transmission oil fill tube (1).

NOTE:
The approximate amount of oil necessary is 170 L (45 gal). Do not overfill.

32. Follow the power train oil level checking procedure to adjust the final oil level.

See the information for checking the power train system fluid level.

IMPORTANT:
DO NOT overfill. An overfull system can make a system become too hot during high speed travel.

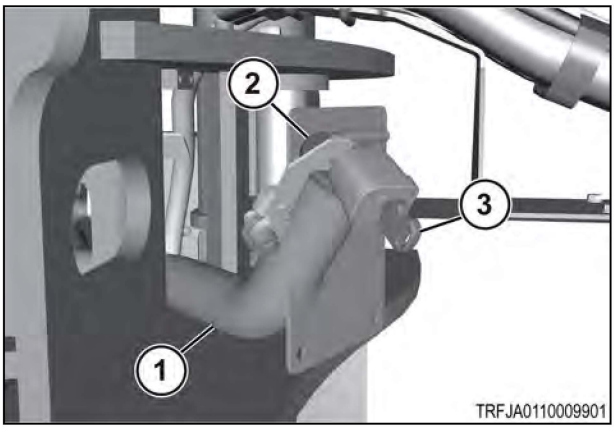

Fig. 63

33. Install the fill cap (2).

34. Install the fill cap lock (3).

4.8.6 Cleaning the breather (transmission)

Clean the breather as required.

Find the breather, on the rear of the transmission.

Procedure

1. Loosen and remove the breather.

2. Clean the breather in clean nonflammable solvent.

3. Install the breather

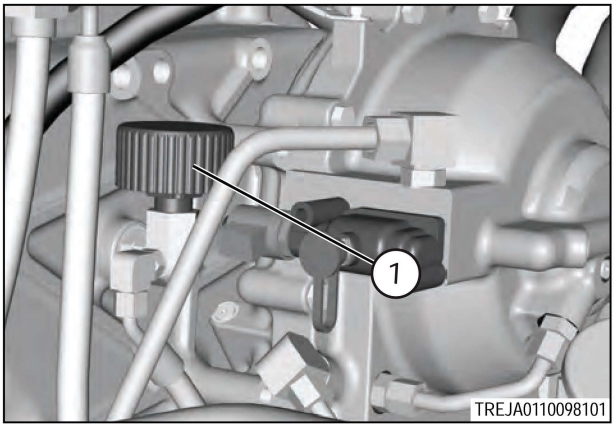

Fig. 64

4.9 Implement and steering hydraulic system

4.9.1 Checking the implement and steering system fluid level

The implement and steering system operates the following functions: Remote Implement Valves, Machine Steering, Hydraulic Trailer Braking (if equipped), and 3-point linkage (if equipped).

The implement and steering system requires the use of an SAE 10W30 transmission/hydraulic oil that meets the AGCO 821XL specification.

Procedure

1. Check the hydraulic oil every ten service hours or daily.
2. Park the machine on a level surface when checking the fluid. Stop the engine, apply the parking brake, and take the key with you.
3. Before starting the machine check that the fluid level is at the full mark (1).
4. If the fluid level is at or below the add mark, add fluid to the reservoir.
5. Make sure the fluid level is within the operating range of the sight gauge with the engine operating and the implements raised. If not add fluid.

   NOTE:
   3.8 L (1 gal) of fluid raises the level in the sight glass approximately 20 mm (0.79 in).

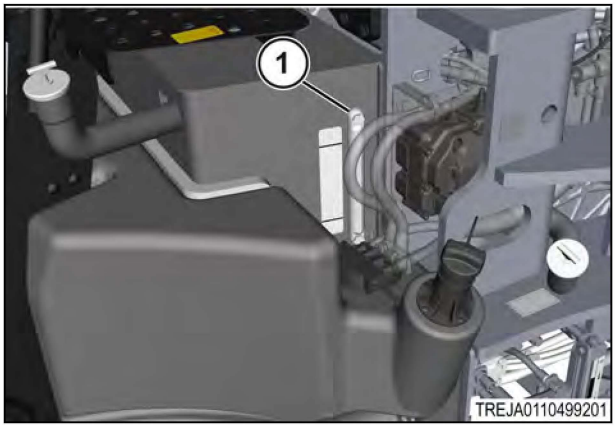

Fig. 65

6. The normal fluid level (1) with the engine off.
7. The normal fluid level (2) with the engine on.

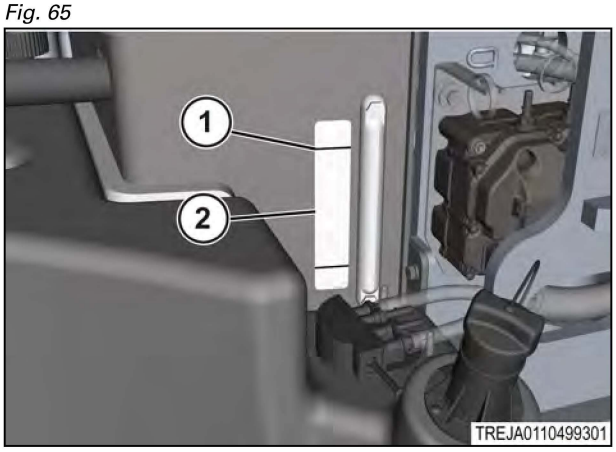

Fig. 66

4.9.2 Changing the implement and steering system fluid

WARNING:
Hot oil and hot components can cause personal injury. Do not let hot oil or hot components to contact the skin.
The machine uses an isolated fluid circuit for the implement and steering systems. The implement and steering system circuit always remains separate. The implement and steering system requires the use of an SAE 10W30 transmission/hydraulic oil that meets the requirements of the AGCO 821XL specification. The implement and steering system operates the following: Remote Implement Valves, Machine Steering, Hydraulic Trailer Braking (if equipped), and 3-point linkage (if equipped).

NOTE:
The implement and steering system holds approximately 171 L (45 gal) when completely empty. The system will not be completely empty when changing the fluid. The amount that will be drained will be approximately 121 L (32 gal).
.

NOTE:
Care must be taken to ensure that fluids are contained during the performance of the inspection, maintenance, testing, adjusting, and repair of the machine. Be prepared to contain the fluid with suitable containers before opening any compartment or disassembling any components containing fluids. Discard of all fluids according to local regulations and mandates.

Procedure

1. Start and operate the machine for a period of five to ten minutes.
2. Park the machine on a level surface when checking the fluid.
3. Stop the engine, apply the park brake, and take the key with you.
4. Let the oil cool for five minutes before working on the system.
5. Slowly remove the filler cap (1) to remove any pressure that is in the system.

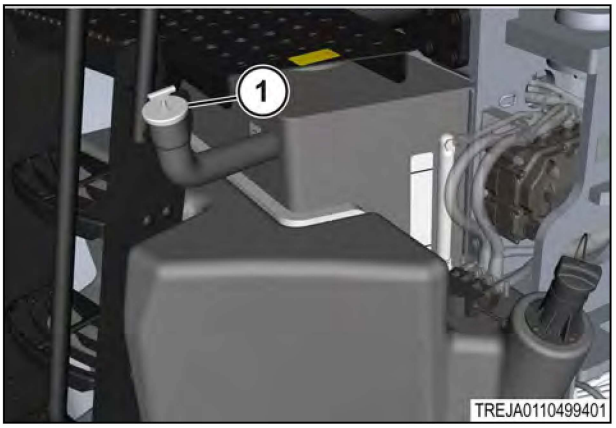

Fig. 67

6. Remove the bolts (1) for the access plate below the DEF tank.

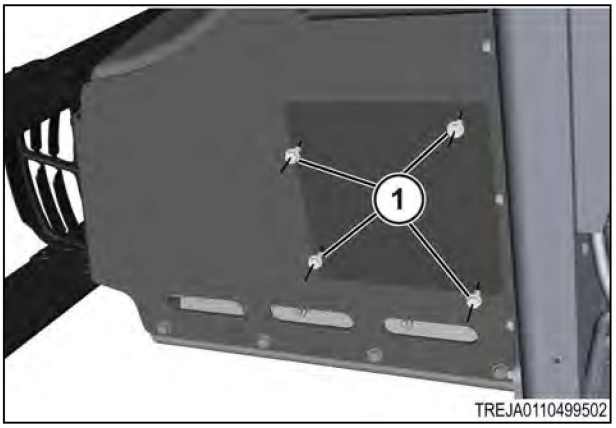

Fig. 68

7. Remove the access plate (1).

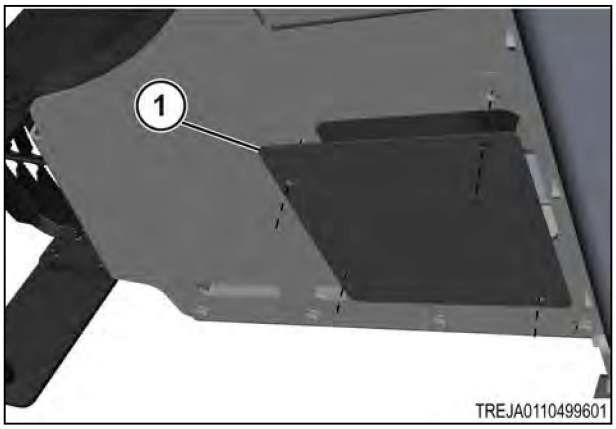

Fig. 69

8. Remove the reservoir plugs (1).

9. Let the oil drain into the correct container.

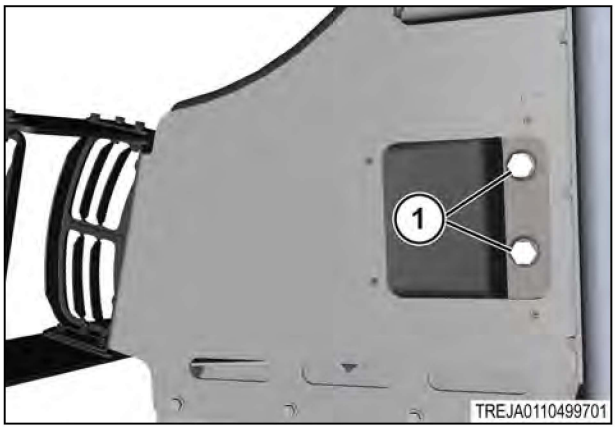

Fig. 70

10. Set an oil pan below the filters. When replacing the filters, there will be a small amount of oil lost.

11. Remove the implement and steering system filters (1).

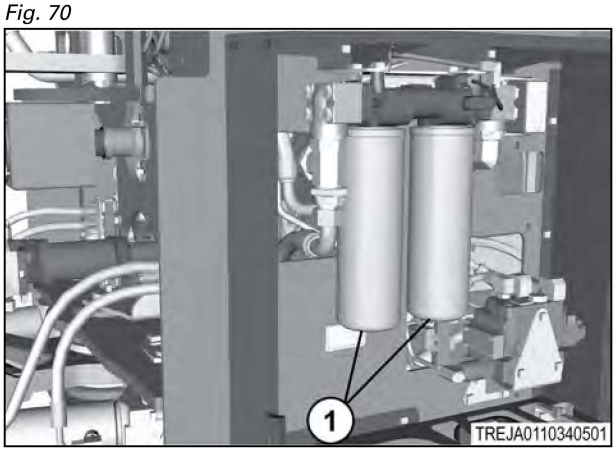

Fig. 71

12. Apply a thin layer of oil to the seal on the filters (1).

13. Install the filters by hand.

14. When the filter seal contacts the filter base, tighten the filter elements by an additional 270 degrees.

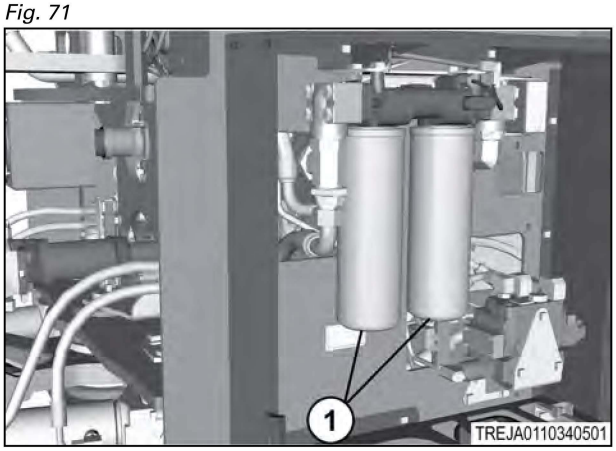

Fig. 72

15. Apply a thin layer of oil to the drain plugs (1) and install to the reservoir.

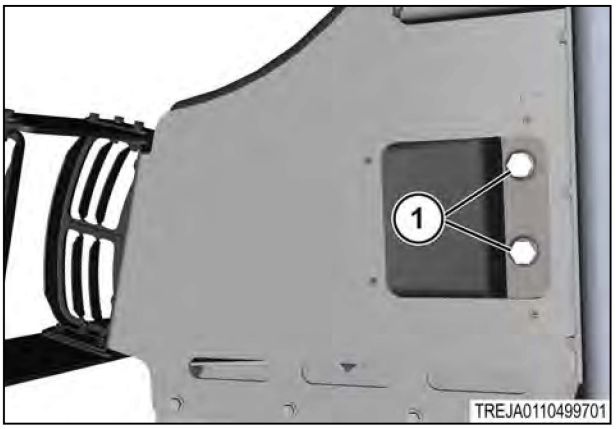

Fig. 73

16. Fill the reservoir until fluid level is at the full mark (1) on the sight gauge.

NOTE:
Approximately 121 L (32 gal) of oil will be necessary.

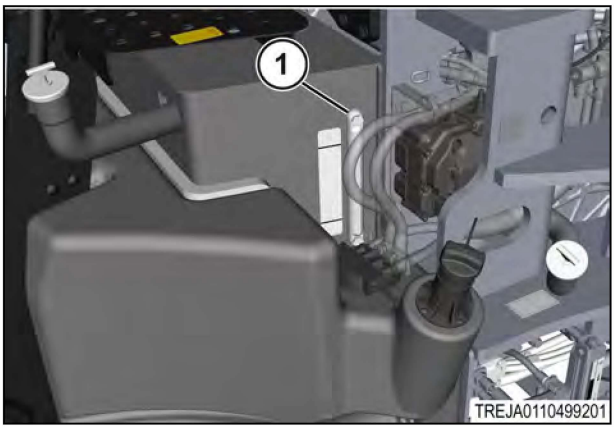

Fig. 74

4.9.3 Cleaning the breather (hydraulic reservoir)

Procedure

1. Loosen and remove the breather (1).

2. Clean the breather in clean nonflammable solvent.

3. Install the breather

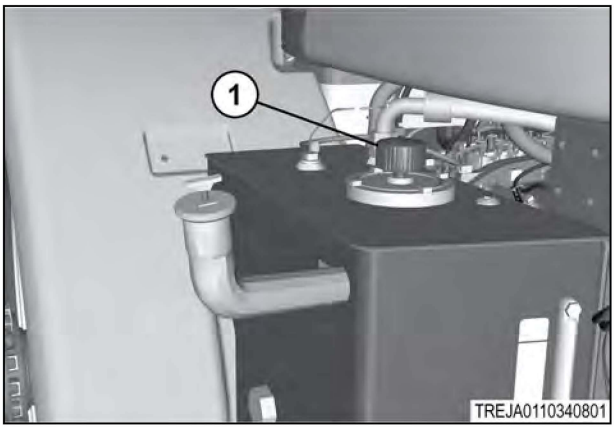

Fig. 75

4.10 Cab filtration

4.10.1 Primary fresh air filter

The primary fresh air filter (1) is located in the roof overhang on the door side of the cab.

The filter removes dust particles drawn into the air system and is partially cleaned each time the cab door is closed, when back pressure flushes the primary air filter. Before removing the filter, close all windows and door. Back pressure from the cab helps remove loose dirt on bottom of the filter.

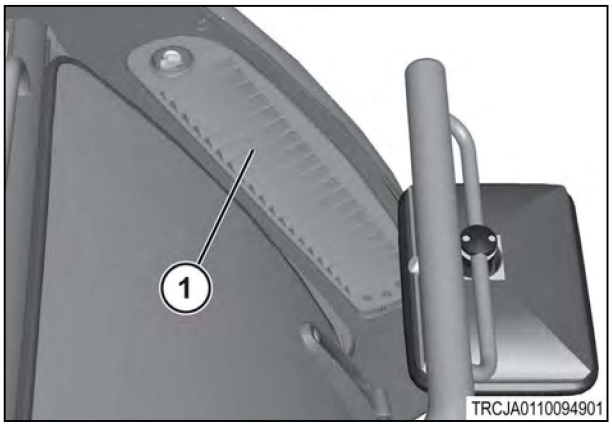

Fig. 76

4.10.2 Removing the primary air filter

1. Loosen the thumb screw (1) on the front of the panel.

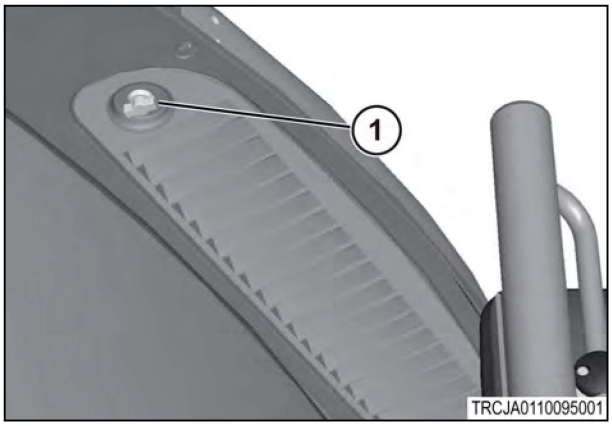

Fig. 77

2. Lower the panel (1) to remove the primary air filter (2).

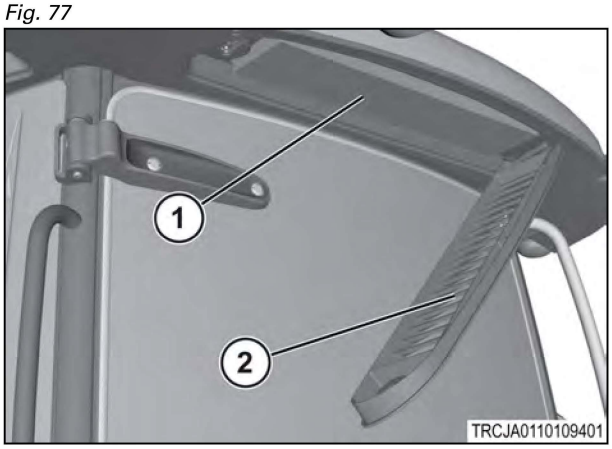

Fig. 78

4.10.3 Filter maintenance

Examine the filter each 250 hours of operation. Replace the cab filters each 1000 hours or one time a year, whichever comes first.

4.10.4 Cleaning the filter

To remove the filter of dust, hold the filter and tap on a flat surface with the dirty side down.

NOTE: *Tapping too hard can cause damage.*

The operator can use compressed air also. Blow air through the element in the direction opposite of the normal air flow.

IMPORTANT: *Keep the nozzle a minimum of 25.4 mm (1 in) from the surface. Too much air pressure can cause damage.*

WARNING:
To avoid personal injury, always wear eye and face protection when using pressurized air.

4.10.5 Installing the primary air filter

1. Slide the primary air filter (1) into position.

   IMPORTANT: *Make sure the airflow arrows on the filter are pointing up for correct operation.*

2. Lift the panel (2) into position and tighten the thumb screw to attach the panel in to position.

   NOTE: *The seals must come in contact with the surface to prevent air bypass.*

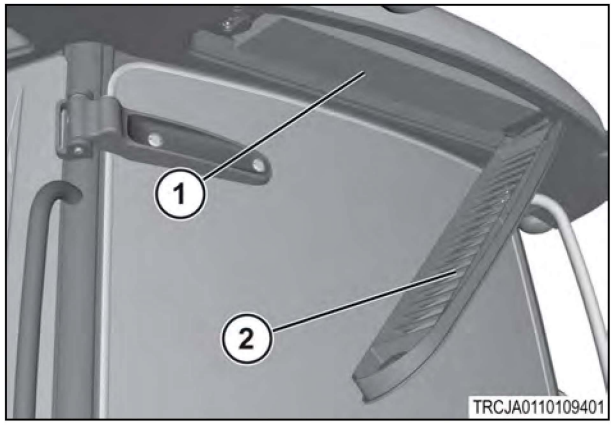

Fig. 79

4.10.6 Recirculation filter

The recirculation filter purifies the air for the HVAC pressurization fan and pulls the air from inside the cab. Premature pressurization and fan motor failure occurs if the filter is not in place. The recirculation filter is the only filter for the pressurization fan.

WARNING:
The charcoal filter lowers the levels of contamination in the cab during spraying operations. The filter does not replace or remove the need for personal protective devices. Follow all recommendations of the chemical manufacturer regarding personal protection, handling and disposal of chemicals.

NOTE: *There is optional charcoal filters available with the local dealer.*

NOTE: *Any chemical contaminants permitted into the cab while the door is open is not filtered.*

Outdoor conditions impact the life of the filter. The operator can detect contamination by odor, by taste, or other symptoms.

WARNING:
Not good enough sealing can cause filter malfunction. Personal injury will result. Isoamyl acetate, which has a banana-like odor, may be used to check the seal. Regularly inspect the door gasket for damage.

IMPORTANT: *When removing the filter from its protective packaging, immediate installation must follow. Exposure to the environment reduces the effectiveness of the filter.*

NOTE: *Keep the replacement filters in the original packaging in a clean dry area away from exposure to any chemicals. Keep the floor areas of the cab clean from any unwanted material when keeping the replacement filter in the cab.*

NOTE: *Do not clean the vapor absorption (carbon) section of the filters. Replace the filter if the odor, the taste or any other indication of contamination is found.*

4.10.7 Removing the recirculation filter

Procedure

1. Loosen the thumb screw (1) to remove the filter cover (2).

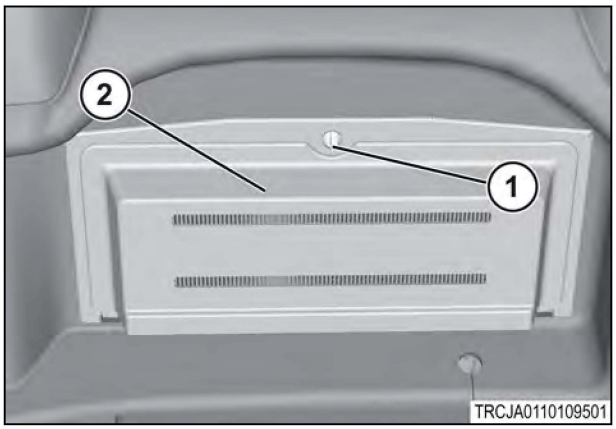

Fig. 80

2. Remove the filter element (1).

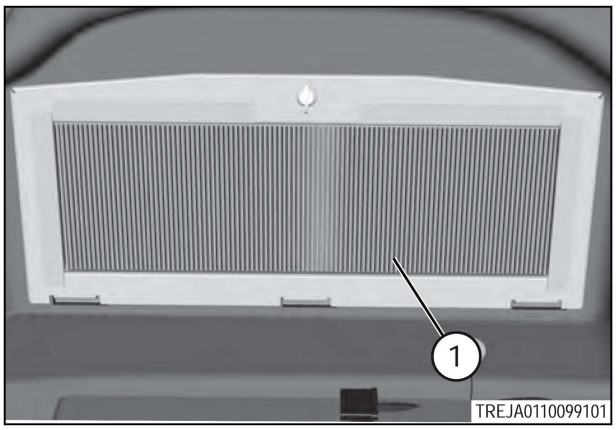

Fig. 81

4.10.8 Installing the recirculation filter

Procedure

1. Put the filter element (1) into position. Make sure the air flow arrows are pointing rear to make sure of correct operation.

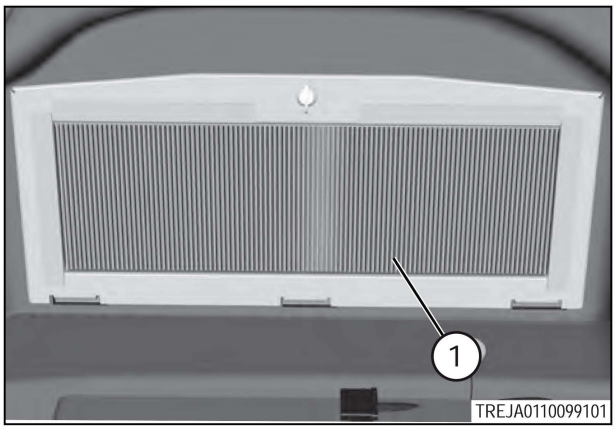

Fig. 82

2. Tighten the thumb screw (1) to attach the cover (2) in position over the filter.

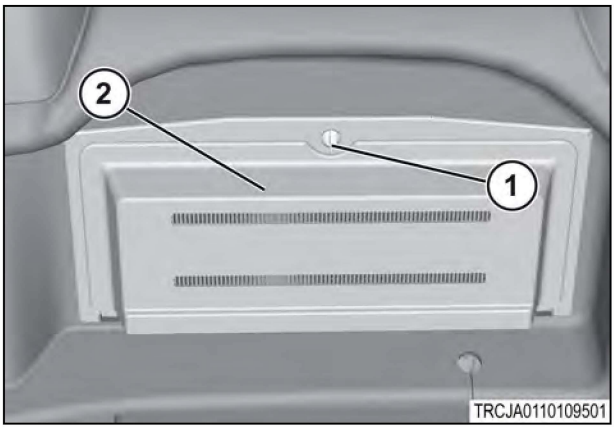

Fig. 83

4.11 Locking the articulation joint area

The articulation lock must be engaged before performing any maintenance or repair. Use the following procedure to install the articulation lock.

1. Turn the machine slightly to the left.
2. Remove the locking pin (1).
3. Slide the bar (2) from the front to the rear.
4. Align the holes and replace the locking pins (1) and (3).
5. Slowly turn machine to the right until the articulation lock is fully extended, and prevents further articulation to the right.
6. Remove the key from the ignition switch, and take the key with you. Fasten a Do Not Operate sign to the steering wheel.
7. View of the articulation lock engaged (4).

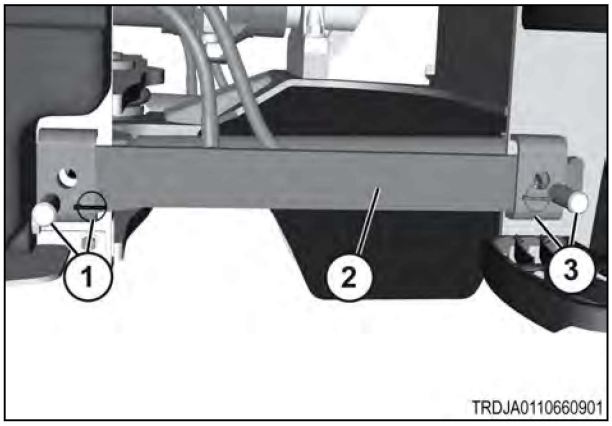

Fig. 84

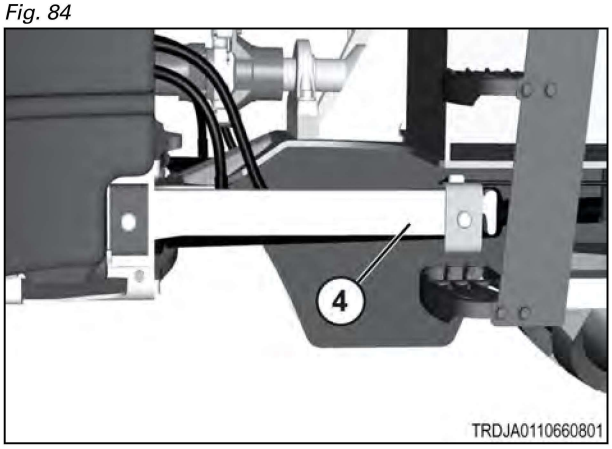

Fig. 85

4.12 Grease point locations

4.12.1 Drivelines grease point locations

Grease points (1)are on driveline support bearing and the driveline slip joint.

NOTE: *Over-greasing can lead to excess heating of the bearing and can damage the bearing seals. Add only enough grease to cause a very small amount to purge from the seal. Wipe away any excess.*

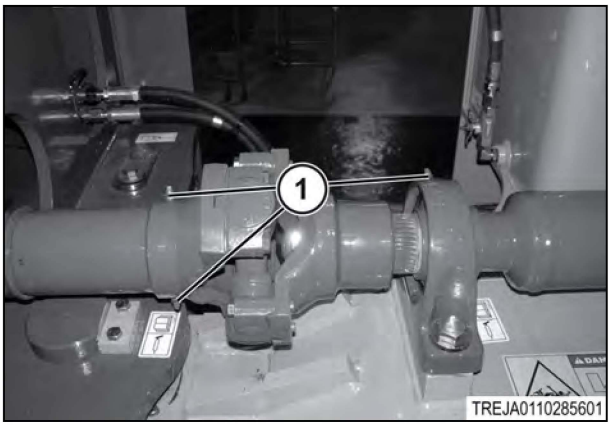

Fig. 86

4.12.2 Steering cylinders grease point locations

There is a grease point (1) on the front left and right of the cylinder.

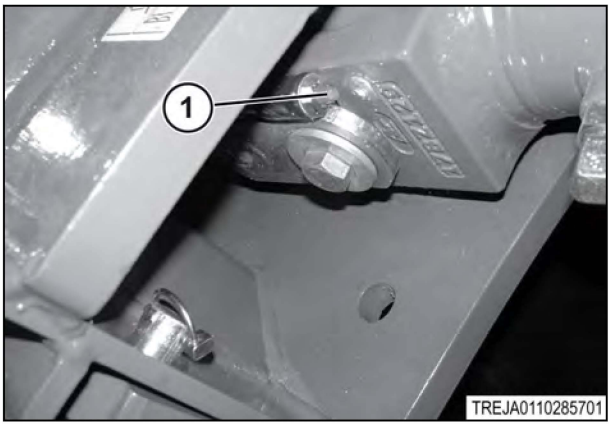

Fig. 87

There is a grease point (1) on the rear left and right on the side of the machine.

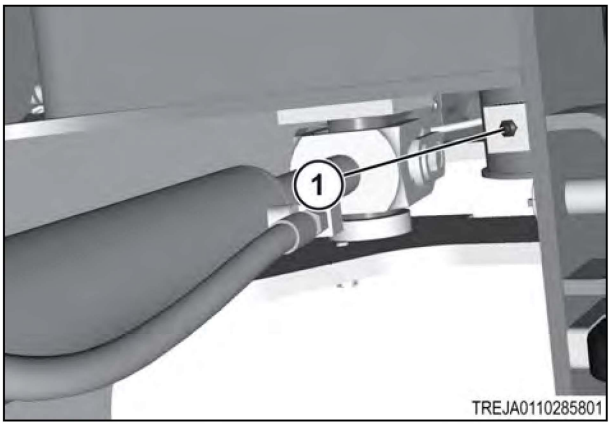

Fig. 88

There are grease points (1) on the top of the front steering cylinder pins.

NOTE: *Must use moly additive grease.*

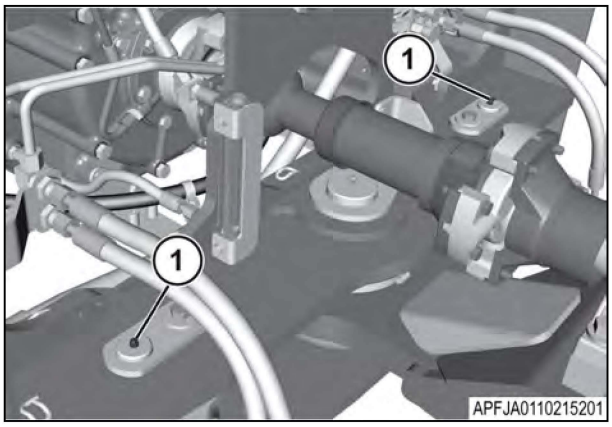

Fig. 89

4.12.3 Upper articulation grease point location

The articulation pin grease point (1) is on the sleeve, located at the upper articulation joint.

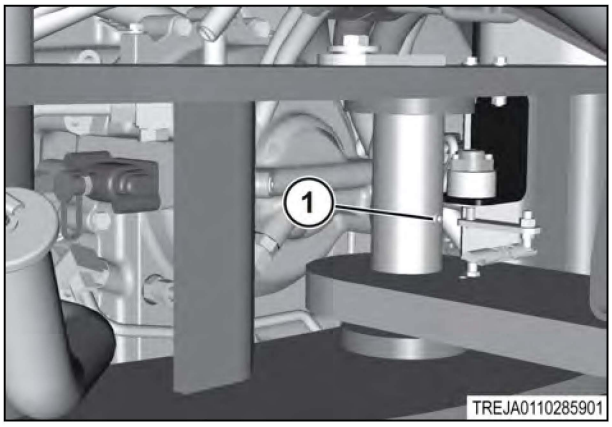

Fig. 90

4.12.4 Lower articulation pin grease point location

The articulation pin grease point (1) is located on the bottom articulation joint.

NOTE: *Must use moly additive grease.*

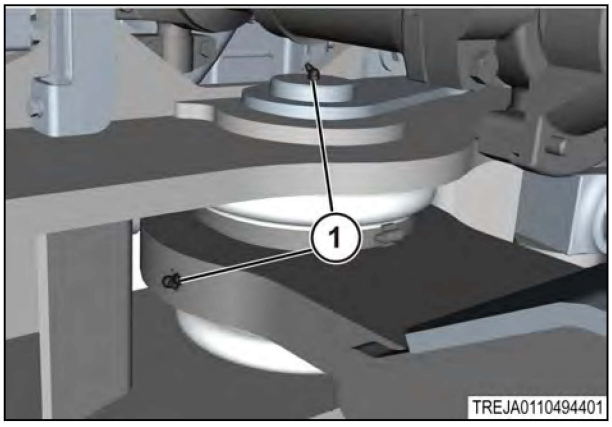

Fig. 91

4.12.5 Extremity arm pivots grease point locations

The extremity arm pivot grease point is on the extremity arm pivot. Lubricate only as necessary.

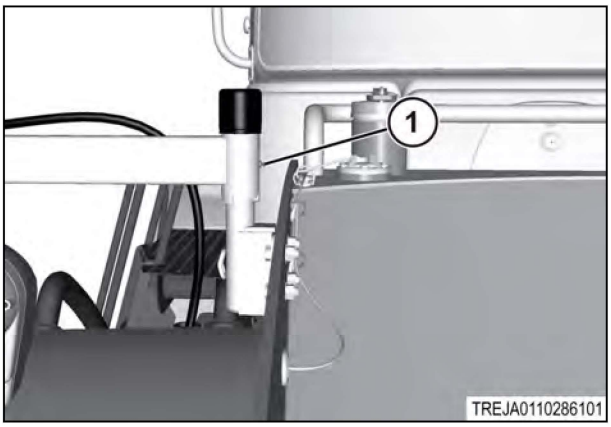

Fig. 92

4.12.6 Power take-off grease point locations

NOTE:

Park the machine on a flat level surface, before servicing. Stop the engine, apply the parking brake, and take the key with you.

Grease points must be greased annually or 500 hour intervals or as conditions require to maintain proper lubrication. Must use moly additive grease.

Grease point locations (1) for the power take-off.

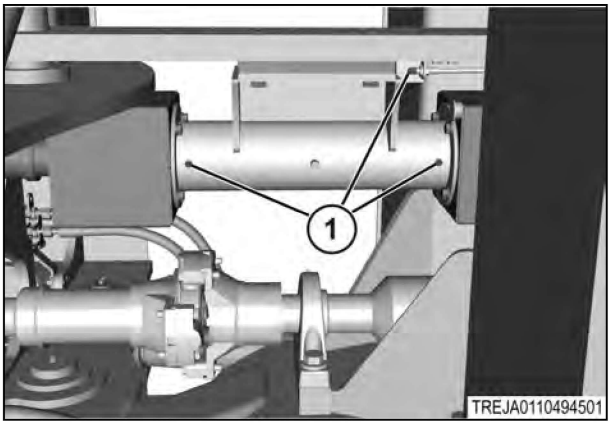

Fig. 93

4.13 Wheels

4.13.1 Wheel removal

There are many tire and rim options that can be installed on the machine. The removal procedure will be the same for triples, duals, and singles.

4.13.2 Removing the outside wheel

WARNING:
Tire and rim assemblies are extremely heavy and require proper handling equipment to safely remove them. Fully support and constrain the tire and rim assemblies before removal. Failure to use correct procedures and equipment can result in personal injury or death due to crushing.

Procedure

1. Exploded view of the triple wheel option.

2. Inflate the inside wheel to 241 kPa (35 psi) for the increased weight load.

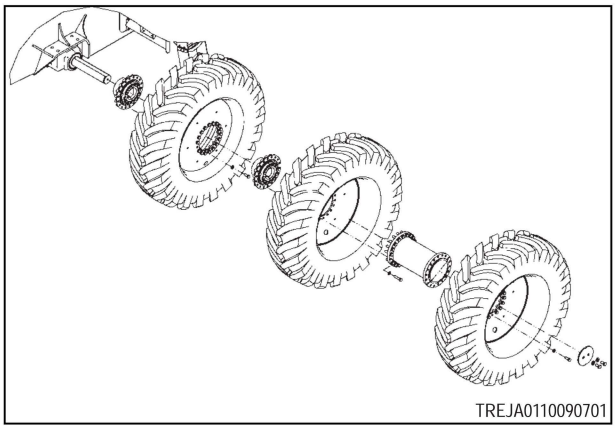

Fig. 94

3. Drive the inside wheel (1) up on to the blocking material so the weight of the machine is off of the outer wheels.

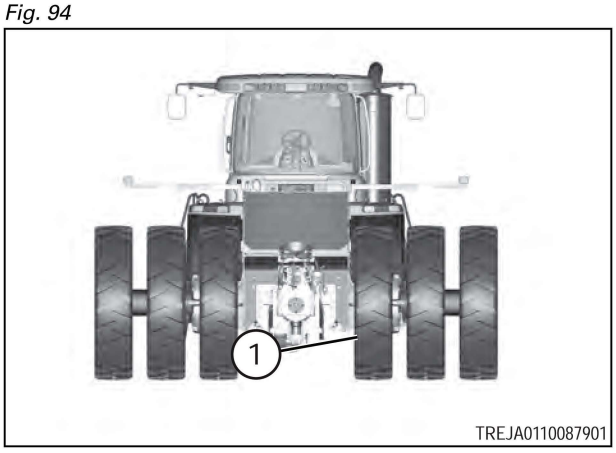

Fig. 95

4. Use the correct lifting tool to support the outer wheel assembly (1). Loosen and remove the mounting hardware (2) that fastens the outer wheel to the spacer (3).

   NOTE:
   The weight of the wheel assembly is approximately 331 kg (729 lb). The weight of each wheel weight is approximately 227 kg (500 lb).

5. Carefully remove the wheel assembly from the machine.

6. Repeat this procedure for the remaining outer wheels.

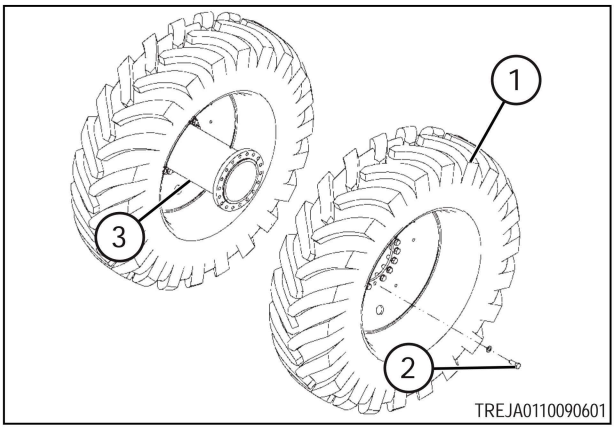

Fig. 96

4.13.3 Removing the center wheel

NOTE: *The procedure for the removal of the single and dual wheels is the same as the triples. The hub spacers may be different for wheel options.*
See the information for the hub spacing.

Special tools

Description	Part number	Vendor	Where used	Mandatory
Wheel guide stud 	332311	K-Line Industries, Inc.	Wheels	Mandatory

Procedure

1. Support the center wheel assembly (1) and the spacer (2) using the correct lifting equipment.

   NOTE:
   The weight range of the wheel assembly is 528.95 kg to 1586.85 kg (1166.14 lb to 3498.42 lb). The weight range of the spacer is 126 kg to 378 kg (277 lb to 831 lb). The weight of each wheel weight is 227 kg (500 lb) .

2. Loosen and remove the two opposite bolts (3) and replace with the wheel guide studs.

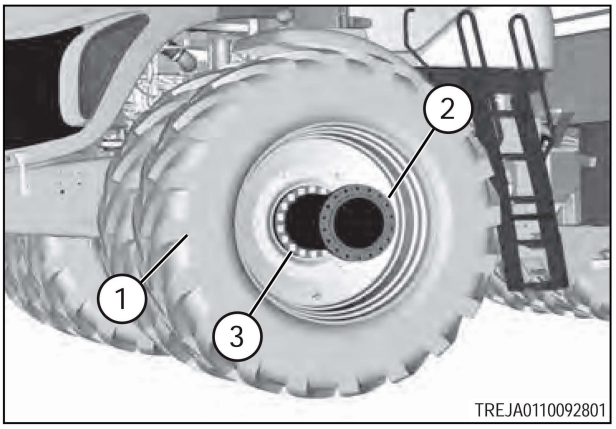

Fig. 97

3. Loosen and remove the remaining mounting hardware (3) that attaches the wheel assembly (1) and the spacer (2) to the hub.

   NOTE:
   The mounting hardware (3) *secures both the wheel assembly* (1) *and the spacer* (2) *to the hub. When the mounting hardware is removed both items will be loose.*

4. Carefully remove the spacer (2) and the wheel assembly (1) from the machine.

5. Remove the mounting hardware (1) and the end plate (2).

   NOTE:

6. Remove the hub and collet (3) from the axle.

   See the information for removing the hub and collet.

7. Repeat this procedure for the remaining center wheels.

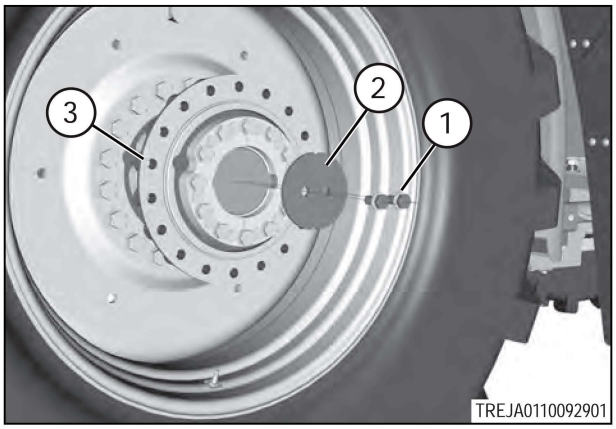

Fig. 98

4.13.4 Removing the inside wheel

Special tools

Description	Part number	Vendor	Where used	Mandatory
Support bracket	203-5584	Caterpillar dealer network	Drive train system	Mandatory
Support stand assembly	1U-7498	Caterpillar dealer network	Drive train system	Mandatory

NOTE: *The procedure for the removal of the single and dual wheels is the same as the triples. The hub spacers may be different for wheel options.*
See the information for the hub spacing.

Procedure

1. Lock the articulation joint with the articulation lock link (1).

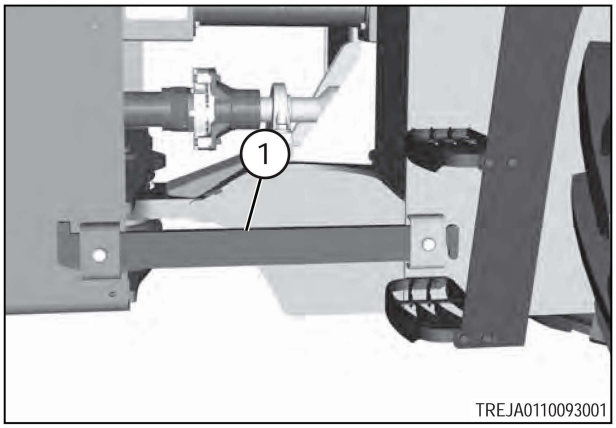

Fig. 99

2. Remove the plugs (1).

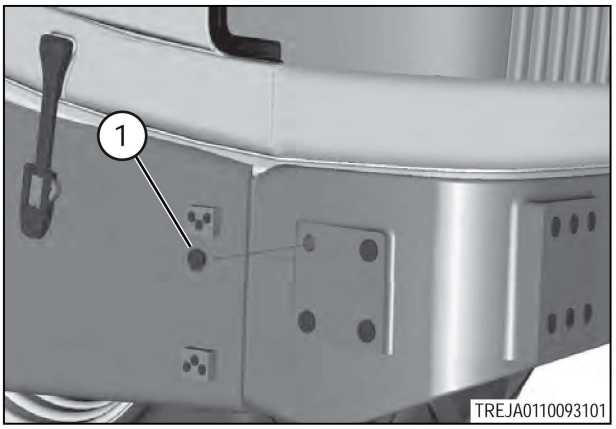

Fig. 100

3. Lift at this location (1) under the front of the machine.

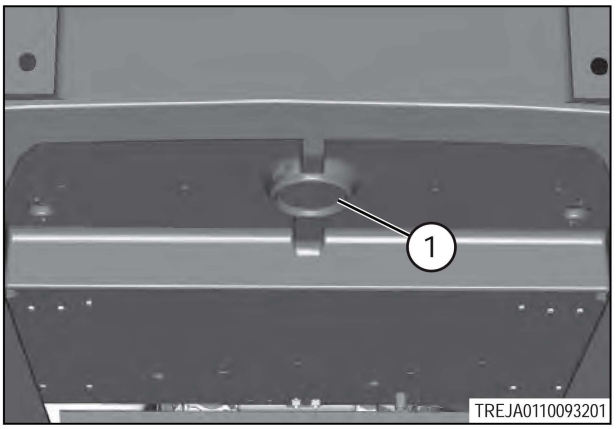

Fig. 101

4. Install the support stand brackets (1) to both sides of the front frame with the mounting hardware (2).

5. Position the correct lifting equipment (3) under the front frame and raise the front end of the machine off of the ground.

IMPORTANT: *Make sure that the lifting equipment is rated for the weight of the machine.*

6. Install the support stands (4) under the support stand bracket (1).

IMPORTANT: *Make sure that the support stands are rated for the weight of the machine.*

7. Lower the machine onto the support stands.

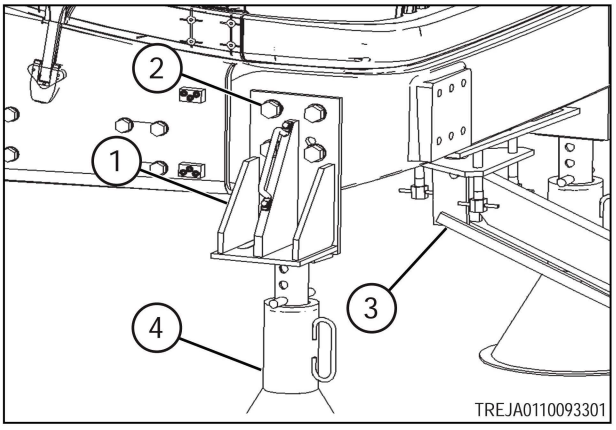

Fig. 102

8. Install the support stand brackets to both sides of the rear frame (1).

9. Lift the rear of the machine off the ground.

   IMPORTANT: *Do not lift on the axle or serious damage can occur. Make sure that the lifting equipment is rated for the weight of the machine.*

10. Install the support stands for the rear frame.

    IMPORTANT: *Make sure that the support stands are rated for the weight of the machine.*

11. Lower the machine onto the support stands.

12. Use the correct lifting equipment to support the inside wheel assembly (1).

    IMPORTANT: *The weight of the wheel assembly is approximately 331 kg (729 lb).*

13. Loosen and remove the mounting hardware (2) that fastens the inside wheel to the hub (3). The hub is securely fastened to the axle.

14. Carefully remove the wheel assembly (1) from the machine.

15. Remove the hub and collet (1) from the axle.

    See the information for removing the hub and collet.

16. Repeat this procedure for the remaining inside wheel assemblies.

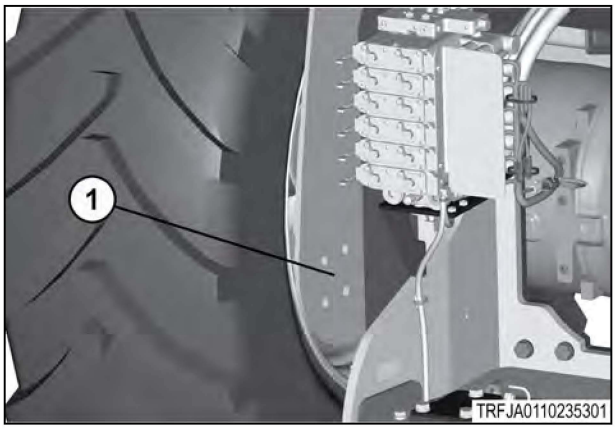

Fig. 103

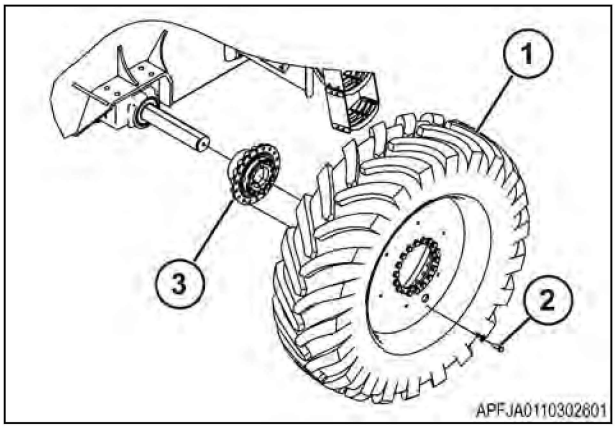

Fig. 104

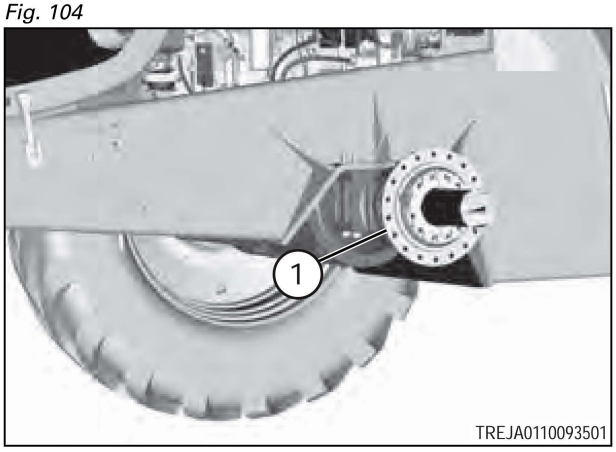

Fig. 105

4.13.5 Wheel installation

There are many tire and rim options that can be installed on the machine. The installation procedure will be the same for triples, duals, and singles.

4.13.6 Installing the inside wheel

NOTE: *The procedure for installation of the single and dual wheels is the same as the triples. The hub spacers may be different for wheel options.*
See the information for the hub spacing section.

Special tools

Description	Part number	Vendor	Where used	Mandatory
Support bracket	203-5584	Caterpillar dealer network	Drive train system	Mandatory
Support stand assembly	1U-7498	Caterpillar dealer network	Drive train system	Mandatory
Wheel guide stud 	332311	K-Line Industries, Inc.	Wheels	Mandatory

Torque specifications

Description	Torque
Wheel mounting hardware	900 Nm (664 lbf ft)

WARNING: *The tire and rim assemblies are extremely heavy and require correct handling equipment to safely install them. Fully support and constrain the tire and rim assemblies before installation. Failure to use correct procedures and equipment may result in personal injury or death due to crushing.*

Procedure

1. Exploded view of the triple wheel option.

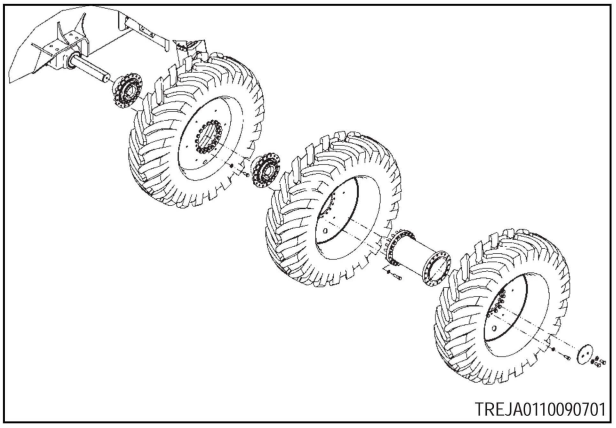

Fig. 106

2. Lock the articulation joint with the articulation lock link (1).

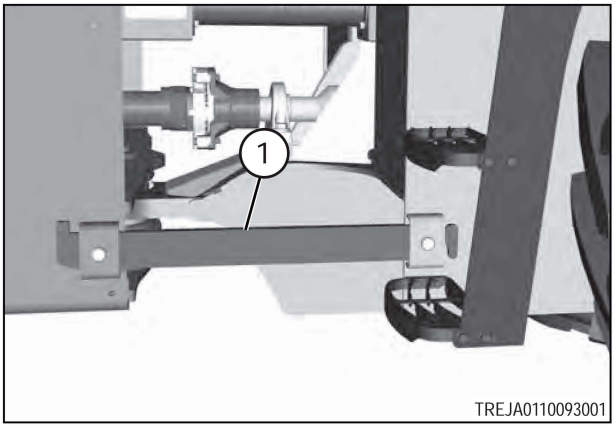

Fig. 107

3. Use the correct lifting tool to raise the front of the machine.

   IMPORTANT: *Make sure not to lift on the axle or serious damage can occur.*

4. Install the correct support stands (1) rated for the weight of the machine.

5. Lower the machine onto the support stands.

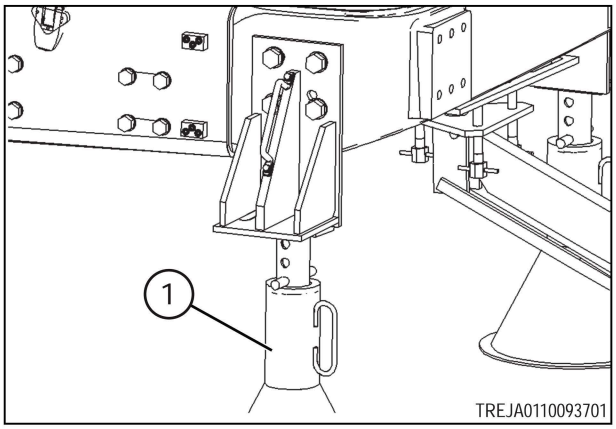

Fig. 108

6. Raise the rear of the machine with the correct lifting tool.

   IMPORTANT: *Make sure not to lift on the axle. Serious damage can occur.*

7. Install the support stand brackets to both sides of the rear frame (1).

8. Lower the machine onto the support stands.

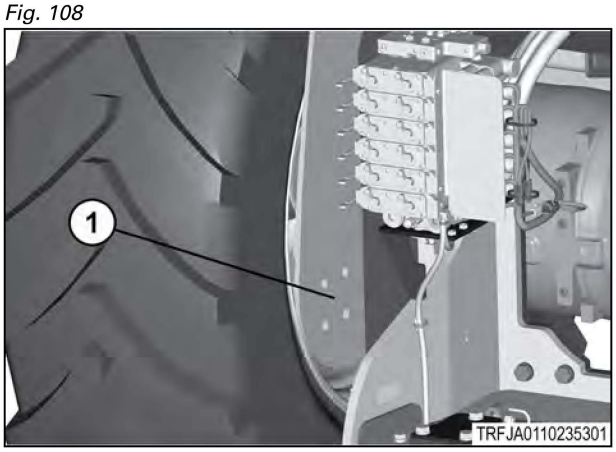

Fig. 109

9. Install the hub (1) onto the axle shaft.

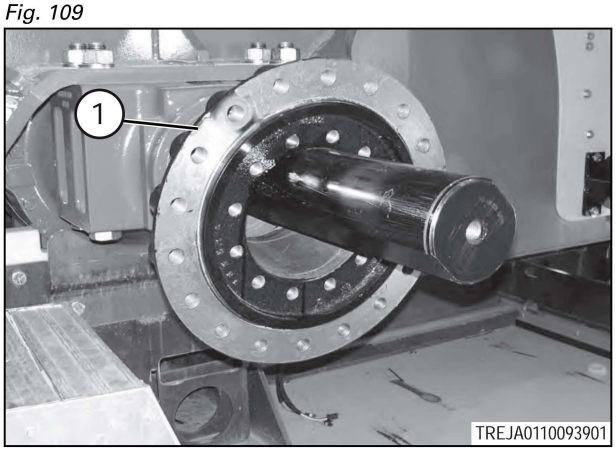

Fig. 110

10. Install both halves of the collet (1) and start the mounting hardware (2).

11. Correctly position the hub.

    See the information for the hub spacing.

12. Make sure that the hub and collet are correctly attached to the axle.

    See the information for the hub and collet installation.

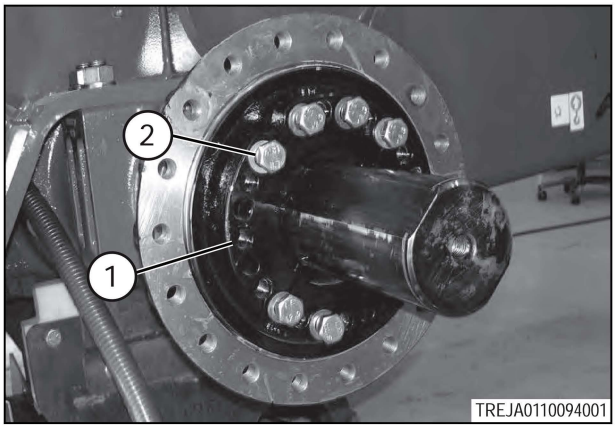

Fig. 111

13. Install the alignment studs (1) in the hub to help with the wheel installation.

14. Install the wheel weights before the wheel is installed.

See the information for installing the wheel weights.

15. Use the correct lifting equipment and move the wheel assembly into position.

IMPORTANT: *The weight range of the wheel assembly is 528.95 kg to 1586.85 kg (1166.14 lb to 3498.42 lb).*

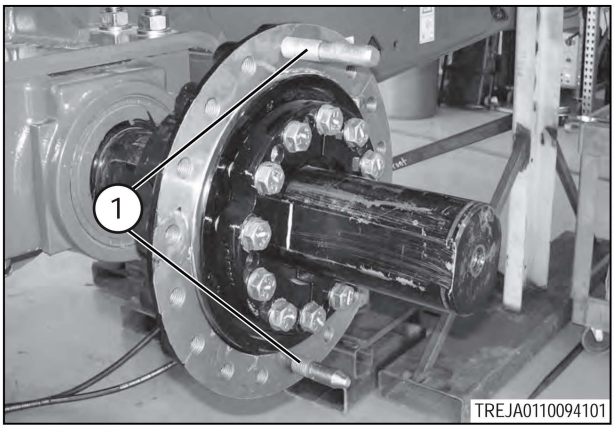

Fig. 112

16. Install the wheel assembly with the mounting hardware (1).

17. Tighten the mounting hardware and tighten in a star shaped pattern to 900 Nm (664 lbf ft).

18. Repeat this procedure for the remaining inner wheel assemblies.

19. Inflate all tires to the correct pressure for the necessary axle weight and load.

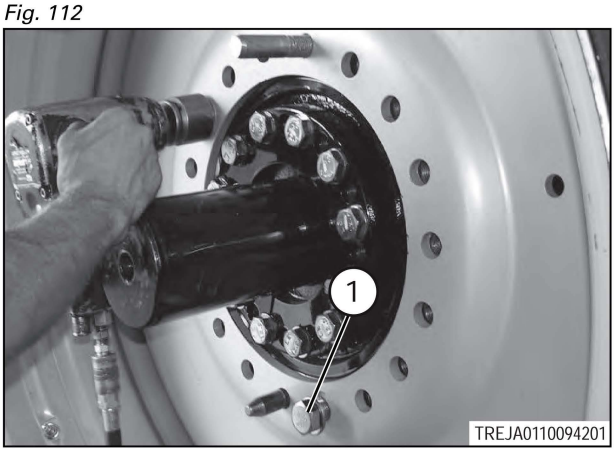

Fig. 113

20. Once all inside wheels have been installed, lower the machine to the ground. Drive the machine for a minimum of ten minutes to seat the wheel weights and the hub collets. Starting at approximately 5 to 8 km/h (3 to 5 mph), bring the machine to a quick stop at least five times, using the service brakes.

21. Tighten the wheel bolts.

22. Tighten the inner collet bolts.

See the information for installing the hub and collet.

23. Tighten the wheel weight mounting bolts.

See the information for installing the wheel weights.

24. All the wheels can be installed before to the re-torque procedure.

See the information for re-torque the wheel and counterweight.

4.13.7 Installing the center wheel

NOTE: *The procedure for installation of the single and dual wheels is the same as the triples. The hub spacers may be different for wheel options.*
See the information for the hub spacing.

Special tools

Description	Part number	Vendor	Where used	Mandatory
Wheel guide stud 	332311	K-Line Industries, Inc.	Wheels	Mandatory

Torque specifications

Description	Torque
End plate mounting hardware	240 Nm (177 lbf ft)
Wheel mounting hardware	900 Nm (664 lbf ft)

Procedure

1. Inflate inside wheel to 241 kPa (35 psi).
2. If the machine is not already supported by jack stands, drive the primary wheels up on to blocking material (1) so that the wheels are off of the ground.

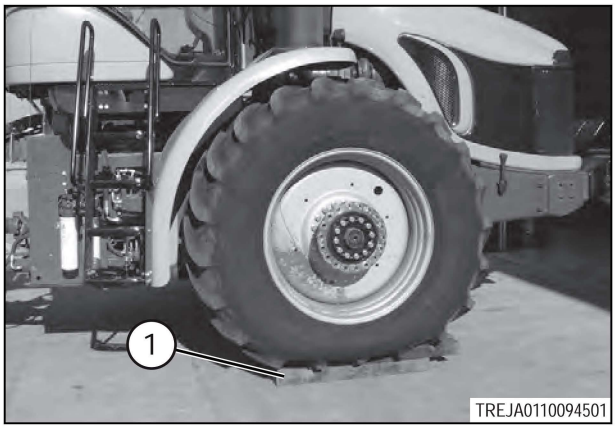

Fig. 114

3. Install the hub (1) and the collet (2) onto the axle.

   See the information for installing the hub and collet spacing.

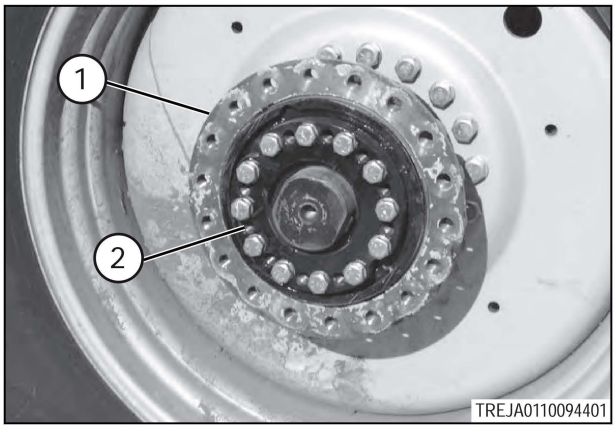

Fig. 115

4. Install the end plate (1) with the mounting hardware (2). Tighten the mounting hardware (2) to 240 Nm (177 lbf ft) .

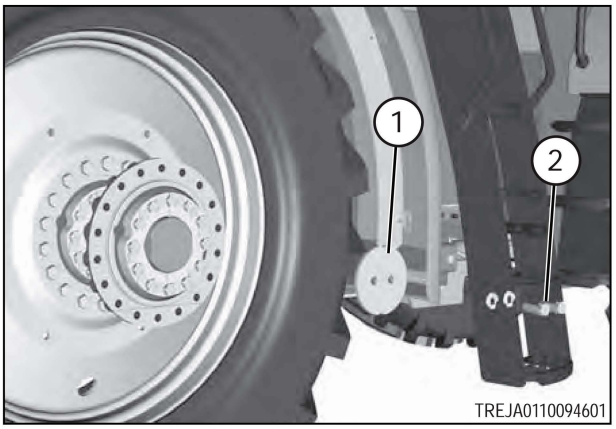

Fig. 116

5. Install the wheel guide studs (1) in hub to aid in the wheel installation.

NOTE:

Install wheel weights prior to the wheel, if equipped.

See the information for installing the wheel weights.

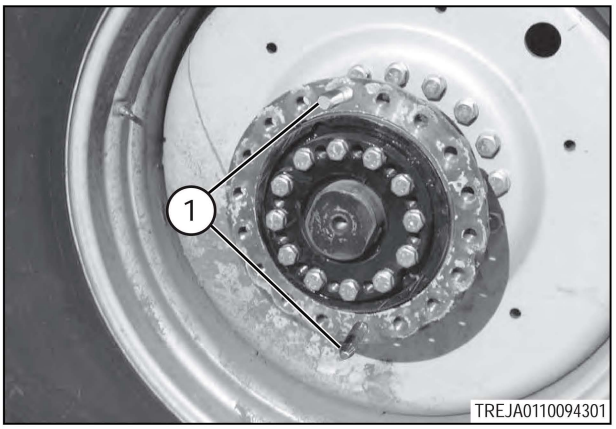

Fig. 117

6. Use the correct lifting tool to move the center wheel assembly and spacer into position.

NOTE:
The weight range of the wheel assembly is 528.95 kg to 1586.85 kg (1166.14 lb to 3498.42 lb). The weight range of the spacer is approximately 126 kg to 378 kg (277 lb to 831 lb). The weight of each wheel weight is 227 kg (500 lb).

7. Mount the center wheel assembly (1) and spacer (2) to the hub with the eighteen bolts with washers (3). Tighten the bolts and torque in a star shaped pattern to 900 Nm (664 lbf ft).

NOTE:
See the information for the hub and collet installation.

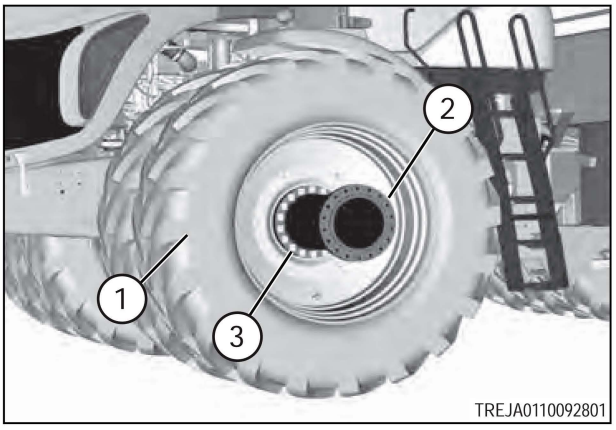

Fig. 118

8. Make sure all tire pressures are set to the correct level for the intended axle weight and load.

9. Repeat this procedure for the remaining center wheel assemblies.

10. Once all center wheels have been installed, lower the machine to the ground.

11. Operate the machine at 5 km/h to 8 km/h (3 mph to 5 mph) for a minimum of ten minutes.

12. Use the service brakes to bring the machine to a quick stop several times.

13. Tighten the wheel bolts.

4.13.8 Installing the outside wheel

NOTE: *The procedure for installation of the single and dual wheels is the same as the triples. The hub spacers may be different for wheel options.*
See the information for the hub spacing section.

Special tools

Description	Part number	Vendor	Where used	Mandatory
Wheel guide stud 	332311	K-Line Industries, Inc.	Wheels	Mandatory

Torque specifications

Description	Torque
Wheel mounting hardware	900 Nm (664 lbf ft)

Procedure

1. If the machine is not already supported by jack stands, drive the primary wheels (1) up on to the blocking material so the weight of the machine is off of the outer wheels. Install wheel guide studs into the mounting holes (2) in the spacer to aid in the wheel installation.

NOTE:
The wheel weights must be installed before the wheel.
See the information for installing the wheel weights.

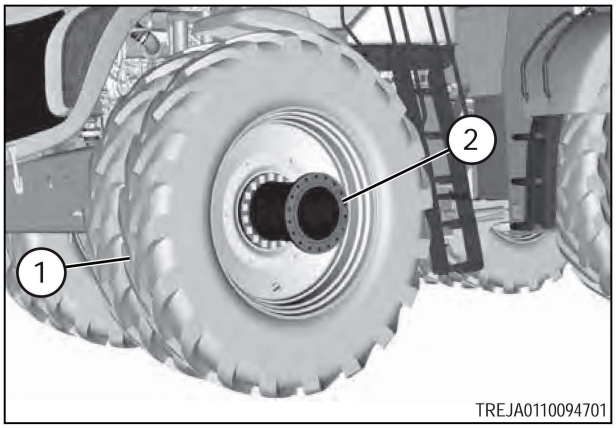

Fig. 119

2. Use the correct lifting equipment and move the wheel assembly into position.

NOTE:
The weight of the wheel assembly is between 528.95 kg to 1586.85 kg (1166.14 lb to 3498.42 lb).
The weight of each wheel weight is 227 kg to 454 kg (500 lb to 1000 lb) .

3. Mount the outer wheel assembly (1) to the spacer with the mounting hardware (2). Tighten the mounting hardware in a star shaped pattern to 900 Nm (664 lbf ft).

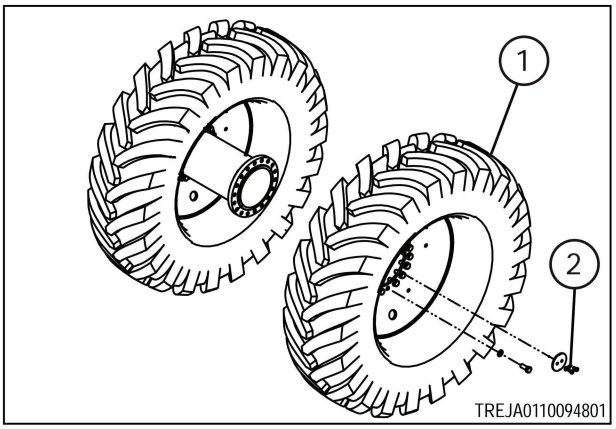

Fig. 120

NOTE:
Repeat this procedure for the remaining outer wheel assemblies.

Make sure that all tire pressures are set to the correct level for the intended axle weight and load.

Once all outside wheels have been installed, lower the machine to the ground. Drive the machine for a minimum of ten minutes to seat wheel weights and hub collets. Starting at approximately 5 km/h to 8 km/h (3 mph to 5 mph), bring machine to a quick stop at least five times, using the service brakes.

Tighten the inner collet bolts using the hub and collet installation procedure.

Tighten the wheel and spacer bolts.

NOTE:
Refer to the hub and collet installation section for more information.

Tighten the wheel weight mounting bolts using the weight installation procedure.

NOTE:
Refer to the wheel weight installation section for more information.

All wheels can be installed before performing the re-torque procedure.

NOTE:
Refer to the wheel re-torque section for more information.

4.13.9 Re-torque the wheel and counterweight

Procedure

1. When all wheels have been installed, lower the machine to the ground.

2. Drive the machine for a minimum of ten minutes to set wheel weights and hub collets. Starting at approximately 5 to 8 km/h (3 to 5 mph), bring machine to a quick stop at least five times, using the service brakes.

3. Tighten all the wheel and spacer bolts in a star shaped pattern to 900 Nm (664 lbf ft).

NOTE:
Refer to the special tooling table for the appropriate tool.

NOTE:
When special tooling is used, the torque specification will have to be modified. Refer to the spacer torque wrench extension table for the proper adjustment.

4. Tighten all inner collet bolts using the hub and collet installation procedure.

NOTE:
See the information for installing the hub and collet.

5. Tighten all wheel weight mounting bolts using the weight installation procedure.

NOTE: *See the information for installing the wheel weight.*

4.14 Hub and collet

4.14.1 Removing the hub and collet

Procedure

1. **CAUTION:**
   Make sure that enough thread remains in the hub to safely hold the collet.

   Loosen and remove all of the bolts and washers that secure the collet (1) except four bolts (2).

   Two of the bolts are located on the joint between the two halves of the collets. The other two bolts are located in between the joints.

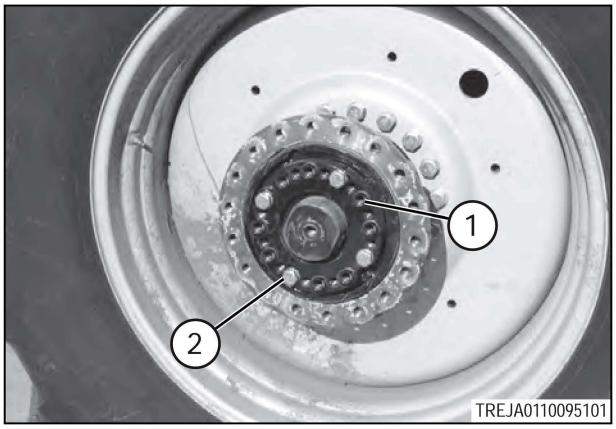

Fig. 121

2. Back out the bolts by 19.0 mm (0.75 in). These bolts will hold the collet if there is any sudden movement.

   NOTE:
   The bolts may need to back out more than 19.0 mm (0.75 in) to let the collet move freely.

3. Install pusher bolts (1) to the collet.

4. Alternate turning the pusher bolts (1) clockwise so that the collet slowly retracts from the hub (2).

   NOTE:
   Additional pusher bolts may be needed.

5. Once the collet has broken free of the hub, remove the bolts, both halves of the collet, and the hub.

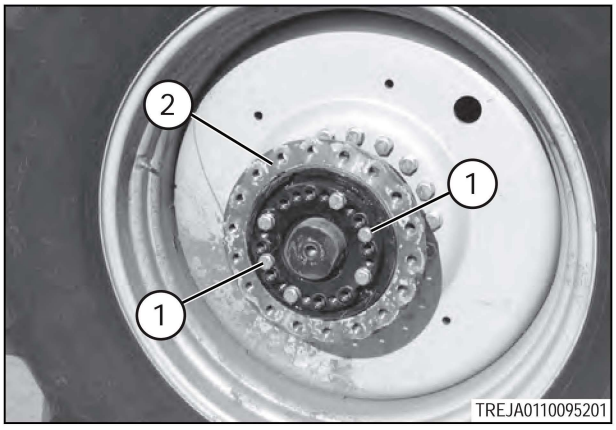

Fig. 122

4.14.2 Installing the hub and collet

Before starting the procedure

Coat the bolt threads with antiseize lubricant prior to installation. Antiseize lubricant not permitted on mating tapered surfaces of collets and outer hub.

Collet Bolt Tightening Sequence.

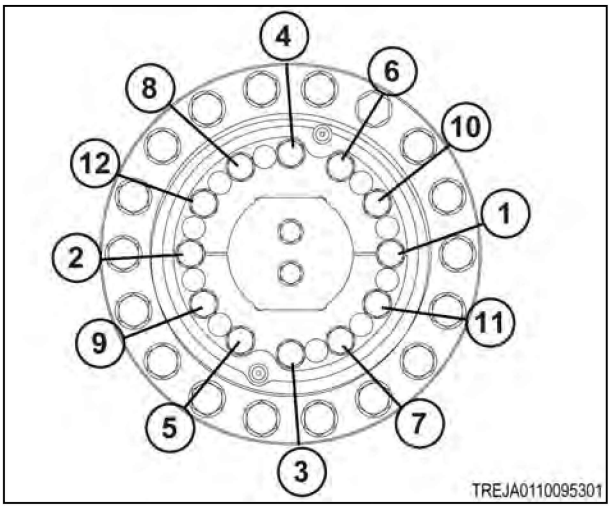

Fig. 123

Procedure

1. Tighten the mounting hardware (1) followed by mounting hardware (2) to a maximum torque of 530 Nm (391 lbf ft).
2. Tighten the mounting hardware (3) followed by mounting hardware (4) to a maximum torque of 530 Nm (391 lbf ft).
3. Tighten the mounting hardware (5) followed by mounting hardware (6) to a maximum torque of 530 Nm (391 lbf ft).
4. Tighten the mounting hardware (7) followed by mounting hardware (8) to a maximum torque of 530 Nm (391 lbf ft).
5. Tighten the mounting hardware (9) followed by mounting hardware (10) to a maximum torque of 530 Nm (391 lbf ft).
6. Tighten the mounting hardware (11) followed by mounting hardware (12) to a maximum torque of 530 Nm (391 lbf ft).
7. Repeat the procedure two more times for a total of three passes.
8. Then repeat the procedure one more time at standard torque of 460 Nm (339 lbf ft).

4.14.3 Hub spacing

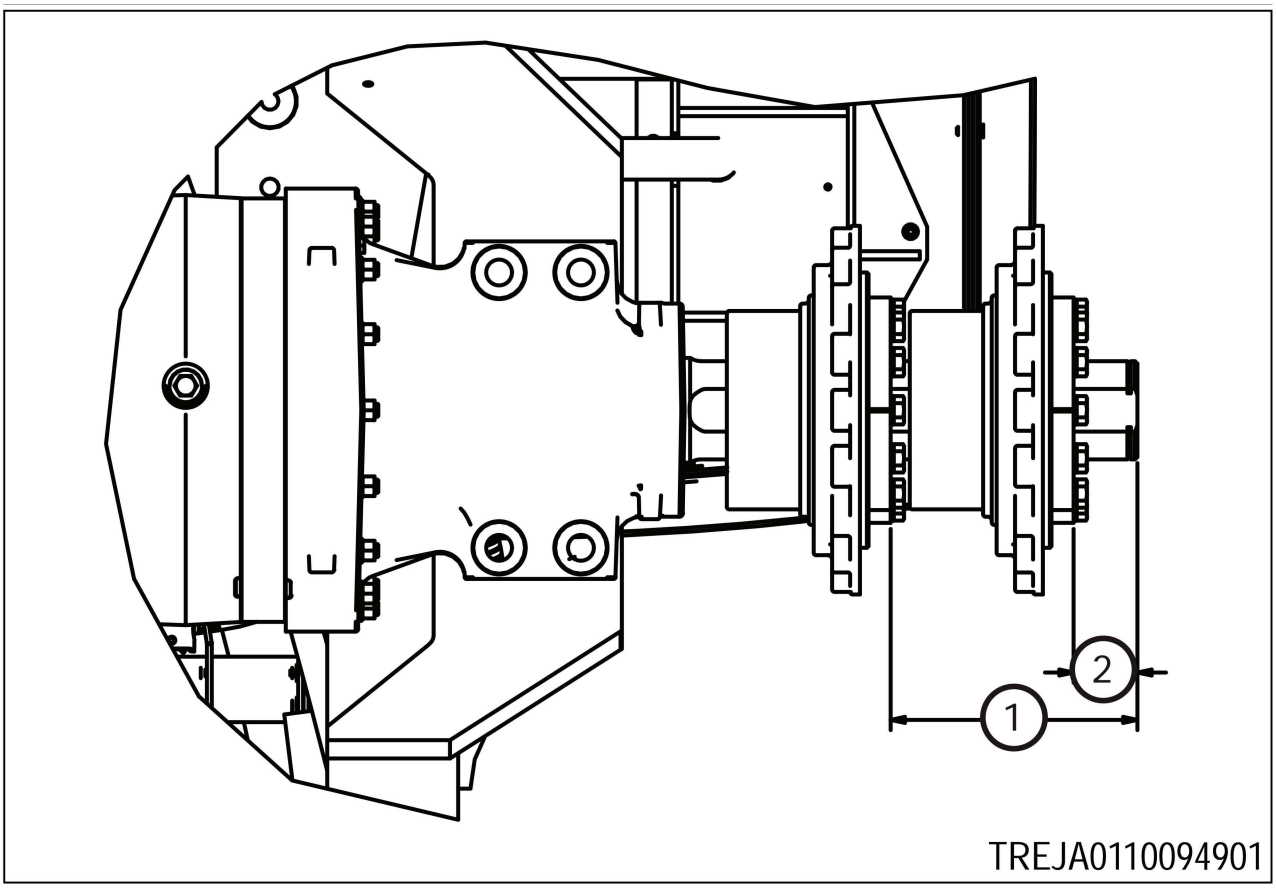

Fig. 124

Triple hubs spacing		
Tire size	End of axle to inner collet face (1)	End of axle to outer collet face (2)
480/80R46	302 mm (11.89 in)	16 mm (0.63 in)
480/80R50	302 mm (11.89 in)	16 mm (0.63 in)
520/85R42	302 mm (11.89 in)	16 mm (0.63 in)
520/85R46	302 mm (11.89 in)	16 mm (0.63 in)

Dual hubs spacing		
Tire size	End of axle to inner collet face (1)	End of axle to outer collet face (2)
620/70R46	302 mm (11.89 in)	65 mm (2.56 in)
650/85R38	285 mm (11.22 in)	-20 mm (-0.79 in)
710/70R38	269 mm (10.59 in)	32 mm (1.26 in)
710/70R42	293 mm (11.54 in)	56 mm (2.20 in)
710/70R42	217 mm (8.54 in)	-20 mm (-0.79 in)
800/70R38	217 mm (8.54 in)	-20 mm (-0.79 in)

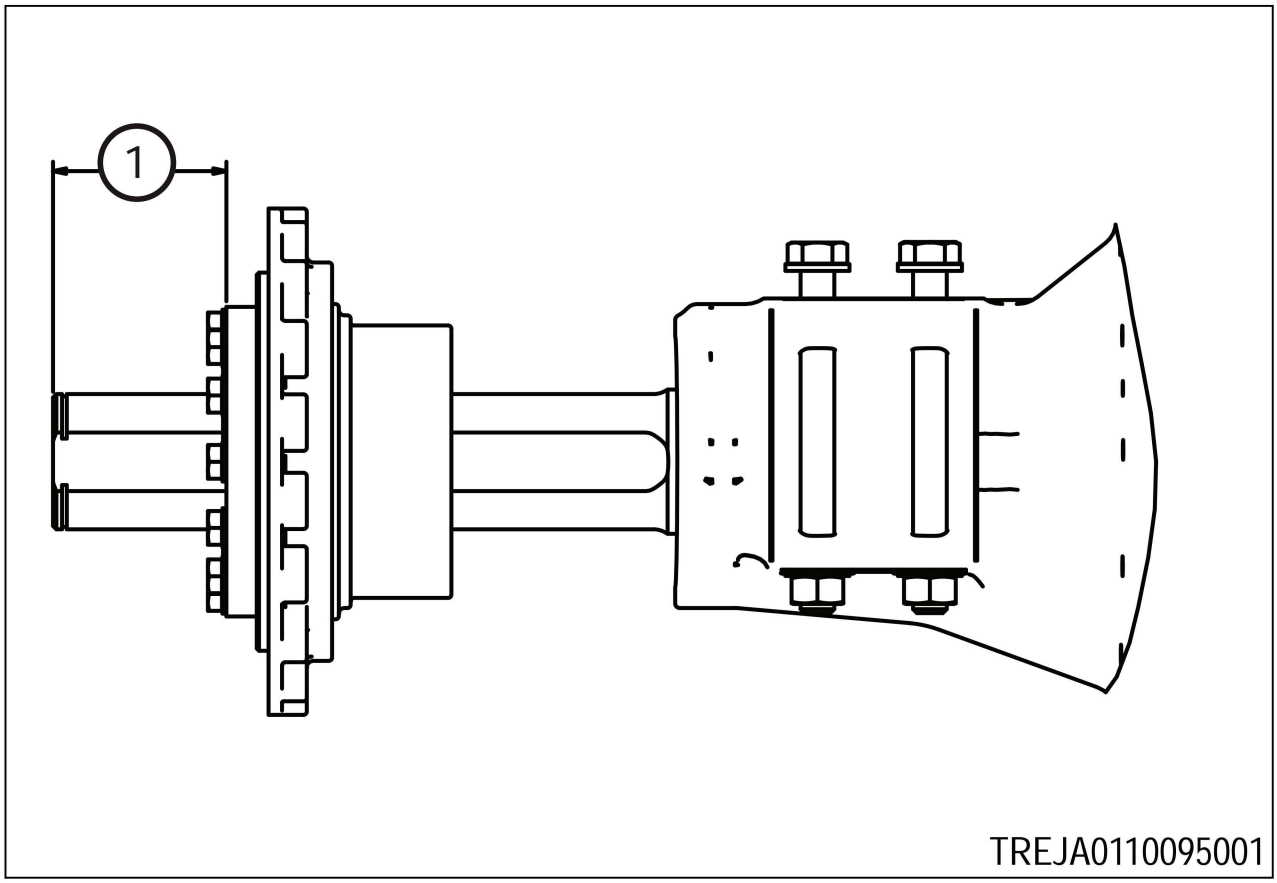

Fig. 125

Single hubs spacing	
Tire size	End of axle to collet face (1)
35.5L32	138 mm (5.44 in)
100/45R46	180 mm (7.09 in)

4.15 Batteries

4.15.1 Removing the batteries

WARNING:
A lead acid battery will generate flammable and explosive gases. Keep sparks and flames away from the battery. Sulfuric acid in battery electrolyte is poisonous. Wear personal protective gear when working with batteries. Sulfuric acid is strong enough to burn skin, eat holes in clothing, and cause blindness if splashed into eyes. If acid contacts eyes, skin or clothing, flush with water immediately. If acid contacts eyes get immediate medical help.

CAUTION:
Make sure to wear correct personal protective gear for working with batteries.

NOTE: *Park the machine on a solid, level surface. Stop the engine, apply the parking brake, and take the key with you.*

Procedure

1. Turn the battery disconnect switch key to the off position (1) to disconnect battery power. Remove the battery disconnect switch key (1).

   NOTE: *The battery disconnect switch is shown in the off position.*

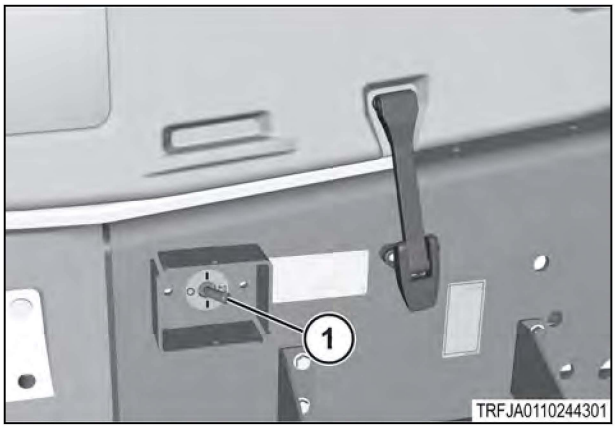

Fig. 126

2. Release both side latches (1) and open the engine cover all the way.

CAUTION:
Safely prop open the engine cover with the prop rod (2). Closing the engine cover makes a pinch point that can cause serious bodily injury.

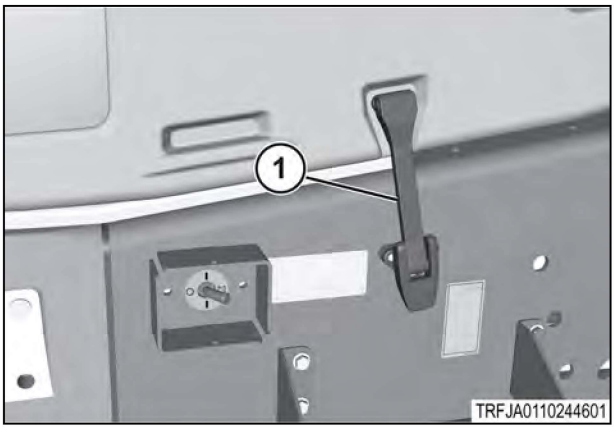

Fig. 127

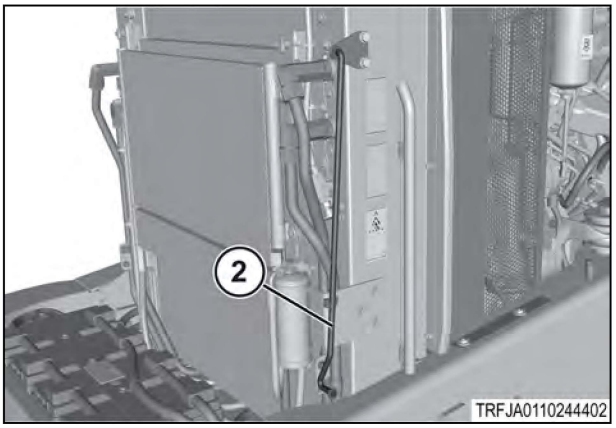

Fig. 128

3. Lift up the terminal boots (1) and loosen the nuts on the terminal clamps. Remove the negative cables (2).

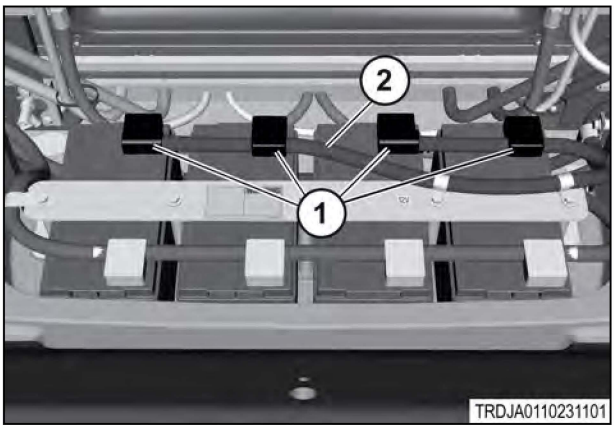

Fig. 129

4. Lift up the terminal boots (2) and loosen the nuts on the terminal clamps. Remove the positive cable (1). Remove the swivel spacer (3) as necessary.

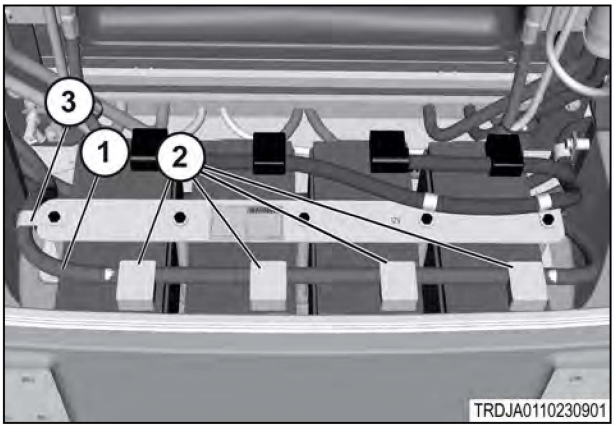

Fig. 130

5. Remove the five bolts and cable clamps (1) and remove the battery mount (2).

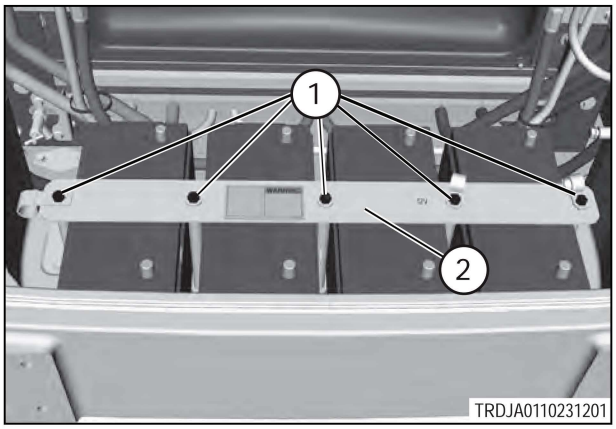

Fig. 131

6. Remove the batteries (1) and set on a dry level surface.

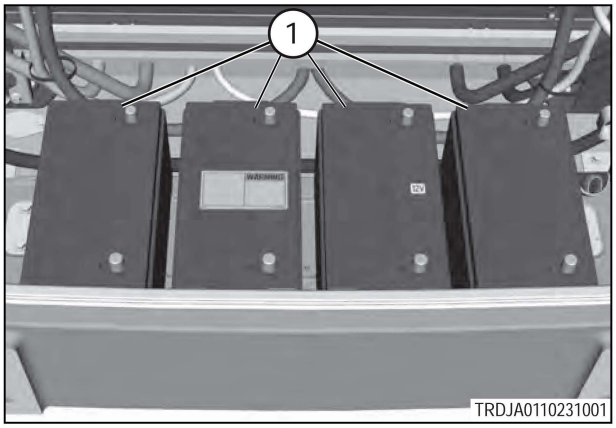

Fig. 132

4.15.2 Installing the batteries

WARNING:
A lead acid battery will generate flammable and explosive gases. Keep sparks and flames away from the battery. Sulfuric acid in battery electrolyte is poisonous. It is strong enough to burn skin, eat holes in clothing, and cause blindness if splashed into eyes. If acid contacts eyes, skin or clothing, flush with water immediately. If acid contacts eyes get immediate medical help.

CAUTION:
Be sure to wear the correct personal protective gear for working with batteries.

Procedure

1. Install the batteries (1) in the frame of the machine.

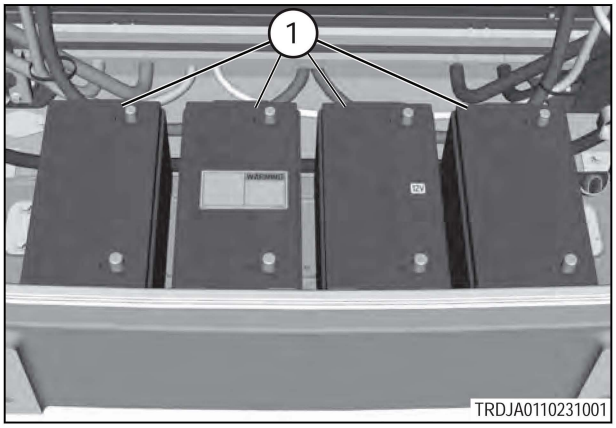

Fig. 133

2. Fasten the battery mount (2), and the hardware with spacers (1) to the frame. Tighten the bolts to 8 Nm (71 lbf in)

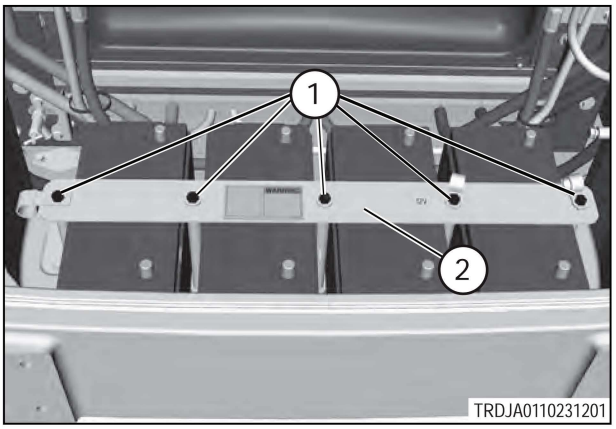

Fig. 134

3. Install the positive cable (1) on the terminals and tighten the nuts on the terminal clamps to 7.2 Nm (5.3 lbf ft). Install the terminal covers (2) on the terminal clamps. Use the hose clamp (3) to hold the hose.

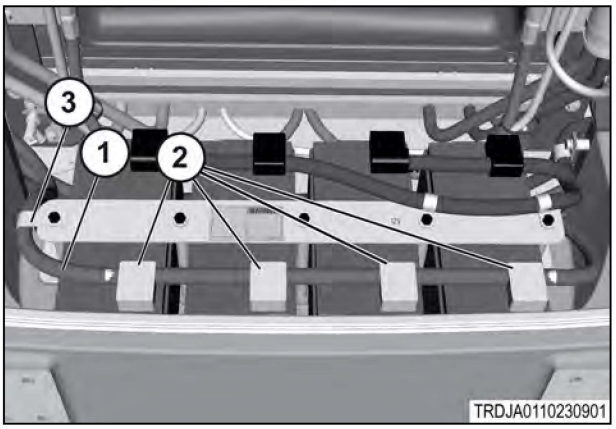

Fig. 135

4. Install the negative cables (2) on the terminals and tighten the nuts on the terminal clamps to 7.2 Nm (5.3 lbf ft). Install the terminal covers (1) on the terminal clamps.

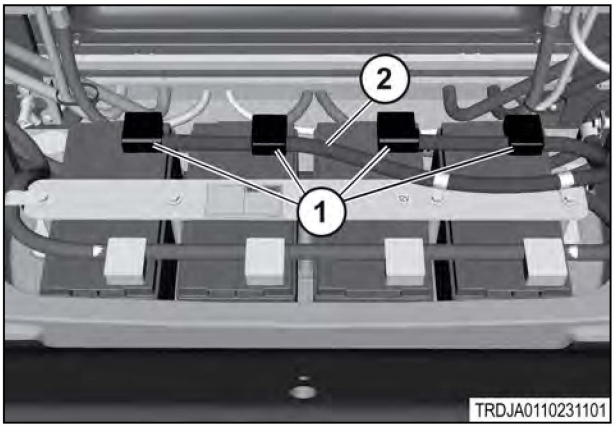

Fig. 136

5. Use the handle (1) to lower the engine cover (2), and fully close.

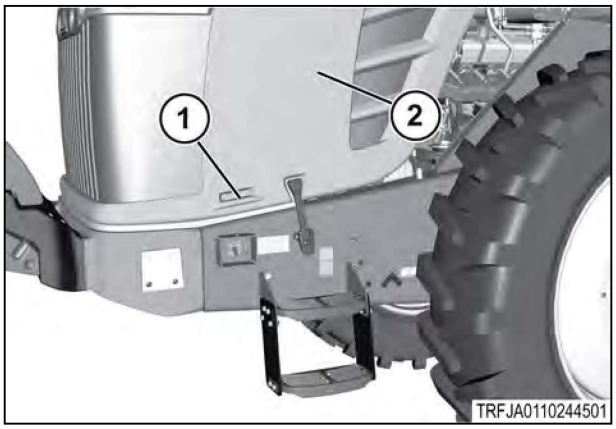

Fig. 137

6. Fasten the latch (1) on the keeper and push the latch lever down (1) to fasten. Repeat on the opposite side.

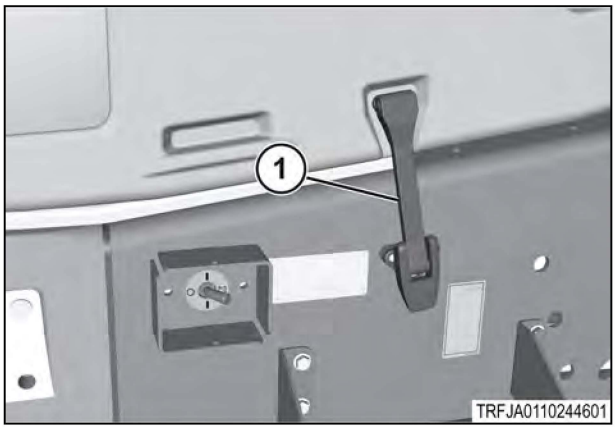

Fig. 138

7. Install the battery disconnect switch key to the on position(1).

NOTE:
Battery disconnect switch is shown in the on position.

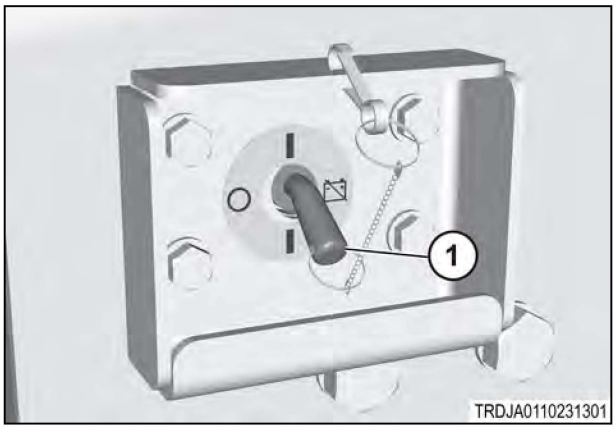

Fig. 139

5. Troubleshooting

5.1 Heating and air conditioning troubleshooting 285
5.1.1 Retrieving diagnostic information from the automatic temperature control unit 285
5.2 Electrical system troubleshooting 288
5.3 Brake troubleshooting 289
5.4 Engine troubleshooting 291
5.4.1 Low diesel exhaust fluid (DEF)/AdBlue® level 296
5.5 Hydraulic troubleshooting 297
5.6 3-point linkage troubleshooting 299
5.7 Transmission troubleshooting 301
5.8 Auto-Guide troubleshooting 303
5.8.1 Auto-Guide ready indicator is not on 303
5.8.2 Auto-Guide ready indicator is on 304
5.8.3 Auto-Guide de-activates during operation 304
5.9 Machine Error Codes 306
5.9.1 Engine error codes 306
5.9.2 Transmission error codes 308
5.9.3 PVED error codes 313
5.9.4 Armrest ECM error codes 314
5.9.5 Auxiliary valve one ECM error codes 318
5.9.6 Auxiliary valve two ECM error codes 318
5.9.7 Auxiliary valve three ECM error codes 318
5.9.8 Auxiliary valve four ECM error codes 319
5.9.9 Auxiliary valve five ECM error codes 319
5.9.10 Auxiliary valve six ECM error codes 320
5.9.11 Front lighting ECM error codes 320
5.9.12 Roof lighting ECM error codes 321
5.9.13 Rear lighting ECM error codes 321

5.1 Heating and air conditioning troubleshooting

Dust enters the cab	
Cause(s)	**Solution(s)**
Unsatisfactory seal on cab air filter element.	Check condition of seal.
Plugged cab air filter.	Clean the cab air filter or replace the cab air filter.
Damaged cab air filter.	Replace the cab air filter.
Air is leaking into the cab.	Seal the air leaks.

Air flow from fan is low	
Cause(s)	**Solution(s)**
Plugged cab air filter or recirculation filter.	Clean the filters or replace the filters.
Plugged heater core or evaporator core.	Clean the core.

Air conditioner does not cool	
Cause(s)	**Solution(s)**
The temperature set-point is adjusted too high.	Press the temperature down button until the desired temperature set-point.
There is a small flow of air through air conditioner condenser.	Clean the radiator screen, the radiator, the oil cooler, and the air conditioner condenser.
The belt for the air conditioner compressor is slipping.	Check the belt tension. Check the condition of the belt and the pulley, if the belt tension is low.
The heater control is turned on.	Turn the temperature control counterclockwise for maximum cooling.
The refrigerant is low.	See your dealer.
The heater shutoff valve.	Close the valve by turning the lever clockwise, when the cab heat is no longer necessary. Open the valve by turning counterclockwise, when the cab heat is necessary.

5.1.1 Retrieving diagnostic information from the automatic temperature control unit

Error code	Problem
E0	No fault detected
E1	Cab sensor shorted
E2	Cab sensor disconnected
E3	Evaporator probe shorted
E4	Evaporator probe disconnected

Error code	Problem
E5	Outlet duct sensor shorted
E6	Outlet duct sensor disconnected
E7	Ambient sensor shorted
E8	Ambient sensor disconnected
E13	Water valve stuck, water valve actuator disconnected, failed, or not responding (tested only on power up)
E14	Mode door stuck, actuator disconnected, failed, or not responding
E16	Compressor clutch over current or shorted
E17	ECU module unpowered, failed, or disconnected Serial communication wires disconnected, or damaged

Procedure

1. Press the outside temperature button (1) three times to display the standard error codes on the LED display (2).

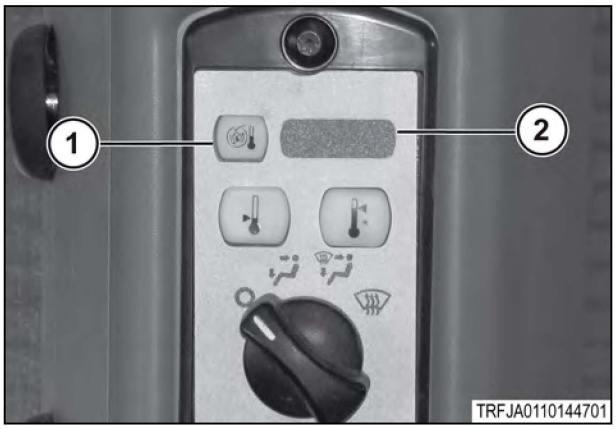

Fig. 1

2. Press the outside temperature button three times and keep the button pressed on the fourth press to display diagnostic information on the LED display. The text CAB will display. The diagnostic information displays in order:

Diagnostic code	Description
CAB	Cab temperature
DUCT	Duct air temperature
EUAP	Evaporator core temperature
A-C	A/C clutch request on/off
HEAT	Water valve position 0 to 100 percent
PRES	Pressure cut out switch on/off, Off=Pressure limit exceeded
SUN	Sun load value 0 to 100, 100=Maximum sun load detected
FAN	Blower fan duty cycle 0 to 100, 100=Maximum speed
DOOR	Mode door actuator feedback position 0 to 100 percent of travel

The control panel can be operated in all functions while in advanced diagnostic mode, including changing the temperature set point, changing the vent mode, or changing the blower fan speed.

Turning the machine off and back on sets the system to normal operation. Turning off the ignition power also sets the system to normal operation.

5.2 Electrical system troubleshooting

Electrical system Is not operating	
Cause(s)	**Solution(s)**
The battery disconnect switch is in the off position.	Turn the battery disconnect switch to the on position.
Battery connections are loose or corroded.	Clean the connections or tighten the connections.
The batteries are sulfated.	Check the battery circuit for a minimum of 12.5 Volts. Charge the batteries or replace the batteries.

Speed of the starter is low and the engine cranks slowly	
Cause(s)	**Solution(s)**
Battery connections are loose or are corroded.	Clean the connections and tighten the connections.
The output of the batteries is low.	Check the battery circuit for a minimum of 12.5 Volts. Charge the batteries or replace the batteries.
Viscosity of the engine oil is in correct.	Use correct viscosity of engine oil for current temperature.

Starter is not operating	
Cause(s)	**Solution(s)**
The transmission control lever is in gear.	Put the transmission control into the park position.
The connections to the batteries are loose or are corroded.	Clean the connections or tighten the connections.
The battery disconnect switch is in the off position.	Turn the battery disconnect switch to the on position.
The batteries are deenergized.	Charge the batteries or replace the batteries.

Batteries will not charge	
Cause(s)	**Solution(s)**
The connections to the batteries are loose or corroded.	Clean the connections and tighten the connections.
The batteries are sulfated.	Check the battery circuit for a minimum of 12.5 Volts. Charge the batteries or replace the batteries.
The alternator belt is loose.	Check the belt tension. If the belt tension is low, check the condition of the belt and pulley. .

5.3 Brake troubleshooting

Soft pedal when the engine is not operating	
Cause(s)	**Solution(s)**
Incorrectly adjusted brake cable	See your dealer

Pedal bottoms out when the engine is not operating	
Cause(s)	**Solution(s)**
Damaged brake cable	See your dealer

Pedal moves too far when the engine is operating	
Cause(s)	**Solution(s)**
Incorrectly adjusted brake cable	See your dealer

Accumulator low pressure warning	
Cause(s)	**Solution(s)**
Leakage in the brake valve	See your dealer
The brake piston is leaking	See your dealer
Leakage in the brake lines	See your dealer

Accumulator charges frequently	
Cause(s)	**Solution(s)**
Leakage in the brake valve	See your dealer
The brake piston is leaking	See your dealer
Incorrect accumulator charge	See your dealer
Damaged brake valve	See your dealer
Air in the brake system	See your dealer

Unsatisfactory service brake performance	
Cause(s)	**Solution(s)**
Air in the brake system	See your dealer
Incorrectly adjusted brake cable	See your dealer
Worn brake discs	See your dealer
Leakage in the brake system	See your dealer

5.4 Engine troubleshooting

Engine starts hard or does not start	
Cause(s)	**Solution(s)**
Fuel level is low or fuel tank is empty. The shutoff valve is in closed position	Check fuel level, fuel lines, and fuel filters. Make sure the fuel shutoff valve is open
Fuel system has a loss of prime	There is air in fuel system. Prime fuel system
Fuel temperature is below cold filter plug point (CFPP)	Use the correct type of fuel
Incorrect viscosity oil in the engine	Check the engine for correct oil viscosity for ambient temperature
Fuel system is dirty	Clean fuel system

Fuel system is dirty	
Cause(s)	**Solution(s)**
Fuel pressure is low.	Check fuel pressure. If low fuel pressure, replace the fuel filters. Make sure fuel does not contain water, air, or dust. If fuel pressure is still low, replace the fuel transfer pump. Clean fuel system - check screen at tank outlet
Clogged fuel filter.	Replace fuel filter elements.
Fuel injectors are malfunctioning.	See your dealer
Engine tuned incorrectly.	See your dealer

Engine misfires or runs rough	
Cause(s)	**Solution(s)**
Fuel pressure is low.	Replace the fuel filters. Check the fuel pressure. Check for leaks in the low pressure fuel system. Check for air in the fuel system. Check for wear or for damage in the fuel transfer pump. Check the fuel system for too much fuel return caused by a malfunctioning return fuel pressure regulating valve. Replace the fuel filters.
Air in fuel system.	Find air leak. Correct problem. Purge air from fuel system.
Clogged fuel filter.	Replace fuel filter element.
Damaged fuel injectors.	See your dealer
The timing for the fuel injection is not correct.	See your dealer

Engine has low power	
Cause(s)	**Solution(s)**
There is a restriction in air cleaner.	Check air cleaner for a restriction.
Diesel engine operating temperature is too low.	Check the thermostats.
Fuel Filter (s) dirty	Replace the filter(s)
Overload of the engine	Shift to a lower gear or reduce load
Fuel pressure is low.	Replace the fuel filters. Check fuel pressure. Check for leaks in low pressure fuel system. Check for air in fuel system. Check for wear or for damage in fuel transfer pump. Check for too much fuel return to tank caused by a malfunctioning return fuel pressure regulating valve.
Quality of the fuel is unsatisfactory	Remove the bad fuel from the fuel tank. Fill the fuel tank with quality diesel fuel. Replace the fuel filters.
The timing is incorrect for the fuel injection	See your dealer

Engine stalls at low rpm	
Cause(s)	**Solution(s)**
Overload of the engine.	Shift to a lower gear or reduce the load.
Fuel pressure is low.	Replace the fuel filters. Check the fuel pressure. Check for leaks in low pressure fuel system. Check for air in fuel system. Check for wear or for damage in fuel transfer pump. Check for too much fuel return to tank. The cause of a malfunctioning return fuel pressure regulating valve can be from too much fuel return.

Engine uses too much oil	
Cause(s)	**Solution(s)**
Oil is leaking from the engine.	Replace the gaskets or the seals. Tighten all the connections.
The engine oil level is too high.	Do not over fill the engine. Determine the cause. Drain the excess oil.
Oil operating temperature is too high.	Check the oil level and viscosity.
Over load of the engine.	Shift down
	Reduce load

Engine uses too much oil	
Cause(s)	**Solution(s)**
Too much wear on the valve guides.	See your dealer.
Worn piston rings.	Replace the components, as required. See your dealer.
Too much idling.	Reduce idle time.

Engine oil pressure is too low	
Cause(s)	**Solution(s)**
The oil level is too low.	Check the oil level. Add the engine oil, as required.
Plugged oil filter.	Install a new oil filter.
Air in the oil.	Check for foaming.
Diesel fuel is mixed with the engine oil.	Check the lip type seals on drive shaft for fuel transfer pump. Drain the crankcase. Refill the crankcase with clean engine oil.
The pickup tube is damaged.	Replace the pickup tube.
Oil pressure gauge and/or oil pressure sender are malfunctioning.	Install a new oil pressure gauge and/or install a new oil pressure sender.
The oil pump relief valve is stuck.	Clean the oil pump relief valve and clean housing. Replace the components, if necessary.
Crankshaft bearings have excessive clearance.	Replace the crankshaft bearings and/or replace the crankshaft. Check operation of the oil filter.
Bearings for timing gear have too much clearance.	Inspect bearings. If necessary, replace the components.
Bore of the rocker arm is too large or the rocker arm has too much wear.	Check lubrication. Replace the components if necessary.
A damaged oil pump.	Repair the oil pump or replace the oil pump. See your dealer. Dealer has the tools and the trained personnel for this service.

Engine uses too much fuel	
Cause(s)	**Solution(s)**
Internal Fuel Leakage	Internal leaks can cause large changes in fuel consumption. Low oil pressure and high oil level in engine oil sump can follow with internal leaks. Replace the components that leak.
Operating engine at higher speed than required for load.	Shift to higher gear and reduce engine speed
Engine knock results from unsatisfactory combustion.	Small increases in fuel consumption can be from a damaged fuel injection nozzle, or misfiring, or low engine power.
Fuel injection timing is not correct.	See your dealer.

Coolant in engine oil	
Cause(s)	**Solution(s)**
Oil cooler is leaking.	Install a new core for oil cooler. Drain the crankcase. Fill the crankcase with clean engine oil. Install a new oil filter element.
The cylinder head gasket has failed.	See your dealer
A damaged cylinder head has cracks.	See your dealer
Cylinder block has cracks, or has a defect.	See your dealer.

Engine oil in the coolant	
Cause(s)	**Solution(s)**
The head gasket has failed.	See your dealer

Coolant is too hot	
Cause(s)	**Solution(s)**
Engine speed is too low.	Increase throttle, shift to a lower gear.
Flow of air through the radiator screen is restricted.	Clean the radiator screen.
	Remove debris from the outer surface of the radiator.
Coolant level is too low.	Determine the cause of the low coolant level. Replace the gaskets and hoses that leak. Tighten all the connections. Add the coolant.

Coolant is too hot	
Cause(s)	**Solution(s)**
Damaged thermostat or temperature gauge.	Check the thermostat for correct opening temperature. Make sure that the thermostat is correctly installed. Check the temperature gauge for correct operation.
There is combustion gases in coolant.	Find combustion gas leakage. Repair the components or replace the components.
Coolant flow is too low	Check the water pump impeller. Repair the water pump as necessary. Check the water pump belt, replace the belt if worn. Check the belt tensioner.

Engine emits too much white smoke	
Cause(s)	**Solution(s)**
Cold engine	White smoke is normal when starting the engine in cold weather.
Air in the fuel system.	Purge air from the fuel system. Check for air leaks on the inlet side of the engine oil suction tube.

Engine emits too much blue smoke	
Cause(s)	**Solution(s)**
Excess oil	Do not overfill the engine. Determine the cause. Drain the excess oil.
There is too much wear on the valve guides.	Repair the cylinder head assembly.
Piston rings stuck, or broken, or worn.	See your dealer.

Engine emits too much gray smoke or black smoke	
Cause(s)	**Solution(s)**
There is not enough air for combustion.	See your dealer.
A plugged or leaking fuel injector.	Replace the fuel injector.
The fuel setting is not correct or injection timing is not correct.	See your dealer.
The turbocharger has failed.	See your dealer.

5.4.1 Low diesel exhaust fluid (DEF)/AdBlue® level

DEF tank level on CAN message	10 %	5 %	0 %	0% + after 1/2 hour
DEF symbol	Temporary, duration 10 sec	Continuous	Blinking, 1Hz	Blinking, 1 Hz
DEF symbol clearable	Yes	No (*)	No (*)	No (*)
MIL symbol	Off	Off	Off	Blinking, 1 Hz
Audible warning	Duration 2 secs, repeats at every restart	Duration 2 secs, repeats every 15 mins	Duration 2 secs, repeats every 5 mins	Duration 2 secs, repeats every 5 mins
Error code	No	No	Yes, SPN 1761, FMI 18	Yes, SPN 1761, FMI 1
DEF injections	Yes	Yes	Yes	No

(*) In mono-display cabins, DEF symbol may be temporarily disabled for displaying other data, but DEF symbol must re-activate after 10 seconds from last button press.

TRFJA0110298001

Fig. 2

- Visible and audible warnings.
- After warning L2(0%), engine ramping down to low idle speed and 50% idle torque in 30 minutes.
- Derate to final inducement before DEF runs out.
- Ramp is usable only once per refill.
- At engine startup, ramp continues from saved point.
- Heals only after refill

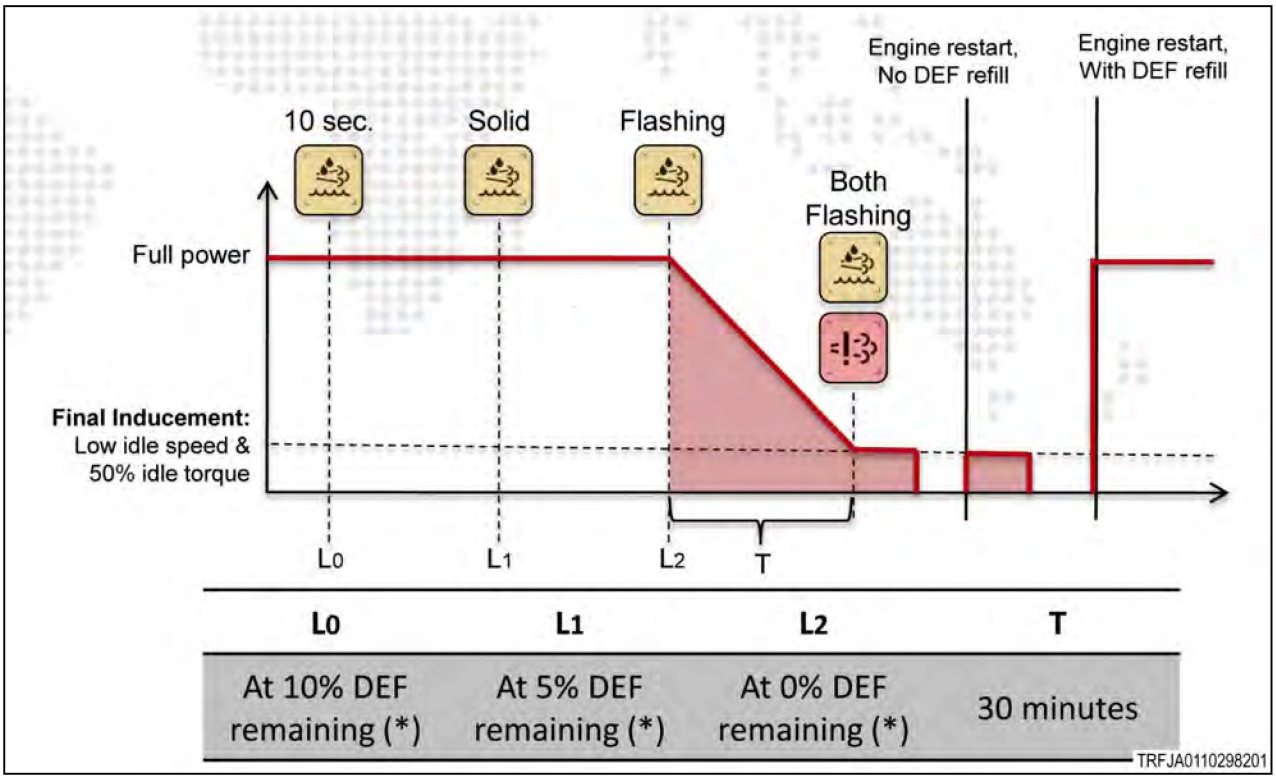

Fig. 3

5.5 Hydraulic troubleshooting

Hydraulic oil overheats	
Cause(s)	**Solution(s)**
The hydraulic system oil level is low or high.	Check the hydraulic system oil level. If necessary, adjust the oil level.
Using incorrect oil viscosity.	Use the correct oil viscosity in the hydraulic system.
The radiator screen, the oil cooler, or the radiator is plugged.	Clean the radiator screen, oil cooler, and the radiator.
Flow control is not correctly adjusted.	Adjust the flow control to lower the flow.
The oil cooler bypass valve is stuck in the open position.	Replace the valve.
Air in the oil.	Find location of the entry of air into the system. Repair the components or replace the components, if necessary.
Implement is not connected correctly.	Adjust flow controls on machine rather than implement.
Crossover relief valve and the pressure override relief valve in the steering pump, are malfunctioning.	See your dealer.
The hydraulic oil filters are plugged.	Replace the hydraulic oil filters.
Charge relief valve is malfunctioning.	See your dealer

Complete hydraulic system does not operate	
Cause(s)	**Solution(s)**
Hydraulic system oil level is low.	Check the hydraulic system oil level. If the oil level is low, add oil.
Suction screen for charge pump is restricted.	Clean the suction screen.
Hydraulic oil filters are restricted.	Replace the hydraulic oil filters.
Hydraulic system is malfunctioning.	See your dealer.
Lockout switch for the hydraulic control valves is activated.	Press the lockout switch to actuate the hydraulic control valves.

Hydraulic control valve does not extend or retract	
Cause(s)	**Solution(s)**
A solenoid is not working on the hydraulic control valve.	See your dealer.
Lockout switch for the hydraulic control valves is activated.	Press the lockout switch to actuate the hydraulic control valves.

Implement hoses will not connect	
Cause(s)	**Solution(s)**
Using incorrect male connectors.	Replace connectors with ISO 5675 standard connectors. Connectors are available from dealer.

Remote attachment does not operate	
Cause(s)	**Solution(s)**
Hoses are not completely connected.	Correctly attach the hoses
Hydraulic load exceeds capacity of the system	Reduce the hydraulic load or use correct size of cylinder
Lockout switch is disabling implement hydraulic system.	Push the lockout switch again.

5.6 3-point linkage troubleshooting

3-point linkage does not move when moving control lever	
Cause(s)	**Solution(s)**
3-point linkage is not phased with the control lever.	Capture the hitch. See Capturing the steerable 3-point linkage
Excessive load on 3-point linkage.	Reduce load on 3-point linkage.
Fast raise/lower switch is in raise position.	Move fast raise/lower switch to lower position.
Raise limit is not correctly adjusted.	Adjust raise limit.
3-point linkage position sensor malfunctioning.	See your dealer.
Hydraulic system is not supplying oil flow or pressurized oil to 3-point linkage lift cylinders.	See your dealer.

External position control switches on the fender do not function	
Cause(s)	**Solution(s)**
Transmission control lever is not in the park position.	Put the transmission control lever in the park position.
Raise/lower switch for 3-point linkage is in raise position.	Move raise/lower switch for 3-point linkage to lower position.
3-point linkage control lever is in the wrong position.	Move the 3-point linkage control lever all the way forward.

3-point linkage does not raise fully	
Cause(s)	**Solution(s)**
Raise limit is not set correctly.	Adjust the raise limit.

3-point linkage lowers too slowly or raises too slowly	
Cause(s)	**Solution(s)**
Incorrectly set lower rate control.	Adjust the lower rate control.
Incorrectly set raise rate control.	Adjust the raise rate control.

Response to the draft load is too slow	
Cause(s)	**Solution(s)**
Incorrectly adjusted draft sensitivity.	Adjust the draft sensitivity.
Lower rate is too slow or raise rate is too slow.	Adjust lower rate control or adjust raise rate control.
Implement is malfunctioning.	See the operator's manual for implement.

Response to the draft load is too fast	
Cause(s)	**Solution(s)**
Incorrectly adjusted draft sensitivity.	Adjust the draft sensitivity.

5.7 Transmission troubleshooting

Machine will not move after starting engine	
Cause(s)	**Solution(s)**
The correct sequence was not performed for the operation procedure.	Move the transmission control lever to the neutral position or the park position. Next, move the transmission control lever to the forward or reverse position.

Inching operations unsatisfactory when using inching clutch control	
Cause(s)	**Solution(s)**
The transmission clutches are out of calibration.	See your dealer.
The inching pedal is out of calibration	Perform pedal calibration

Shifts are rough.	
Cause(s)	**Solution(s)**
The transmission clutches are out of calibration.	See your dealer.

Transmission will not operate	
Cause(s)	**Solution(s)**
There is a displayed fault code. The fault code indicates that the transmission is malfunctioning.	See your dealer.

Transmission oil pressures low	
Cause(s)	**Solution(s)**
Not enough oil in the system.	Fill the system with oil.
The oil supply to the charge pump is restricted or blocked.	Clean suction screen.

Transmission lube pressure is low.	
Cause(s)	**Solution(s)**
The relief valve for the transmission lube is malfunctioning.	See your dealer.

Transmission shifted to neutral.	
Cause(s)	**Solution(s)**
Overload on engine.	Shift down, increase engine rpm.

Inching pedal has diagnostic or is physically not returning to the released position.	
Cause(s)	**Solution(s)**
Inching pedal sensor out of adjustment.	See your dealer.

Power train oil overheat during transport	
Cause(s)	**Solution(s)**
Excessive oil level in power train system.	Drain excess oil from axles and transmission per instruction in the maintenance section.

5.8 Auto-Guide troubleshooting

5.8.1 Auto-Guide ready indicator is not on

Auto-Guide ready indicator is not on	
Cause(s)	**Solution(s)**
Steering wheel is not centered	Center the steering wheel.

Roading lockout switch is engaged	
Cause(s)	**Solution(s)**
The roading lockout switch is in the forward position.	Disengage the roading lockout switch.
Hydraulics, PTO, and hitch cannot be moved with their correct controls.	
Condition of the hydraulic valves on the display screens. Hydraulic one to three shows all locked.	

Loss of power to the receiver, relay or fuse failure	
Cause(s)	**Solution(s)**
Diagnostic indicated.	Replace the failed component.

Harness failure	
Cause(s)	**Solution(s)**
Diagnostic indicated.	Identify the failed harness and replace.

Inching pedal is pressed	
Cause(s)	**Solution(s)**
Inching pedal is pressed	Release the inching pedal.

Inching pedal has diagnostic or is physically not returning to the released position	
Cause(s)	**Solution(s)**
Diagnostic indicated.	Correct the problem with inching pedal sensor.
EDT shows in correct duty cycle for the pedal sensor when pedal is fully released.	

Major sub-system failure which prevents the Auto-Guide from engaging	
Cause(s)	**Solution(s)**
Active diagnostics show in the screen diagnostics.	Correct the problem with subsystem.

Auto-Guide control switch is in the off position	
Cause(s)	**Solution(s)**
Auto-Guide control switch is in the back position.	Move Auto-Guide control switch to the center position.

5.8.2 Auto-Guide ready indicator is on

Auto-Guide engage switch failure	
Cause(s)	**Solution(s)**
Diagnostic indicated	Replace the switch
EDT shows no switch status change when switch is moved.	

Auto-Guide engage switch harness failure	
Cause(s)	**Solution(s)**
Diagnostic indicated	Repair or replace the harness
EDT shows no switch status change when switch is moved.	

5.8.3 Auto-Guide de-activates during operation

Steering wheel moved from the center position	
Cause(s)	**Solution(s)**
Steering wheel moved from the center position	Center the steering wheel and re-engage.

Major sub system failure which disengages the Auto-Guide	
Cause(s)	**Solution(s)**
Active diagnostics show in screen diagnostics.	Correct the problem with the subsystem.

Cannot set waypoints to define path		
Cause(s)	**Symptom**	**Solution(s)**
Roading lockout switch is engaged	Roading lockout switch is in the forward position	Disengage roading lockout switch
	Hydraulics, PTO, and hitch can not be moved with their respective controls	
	Status of hydraulic valves on screen hydraulic one to three shows all locked	

Cannot set waypoints to define path		
Cause(s)	**Symptom**	**Solution(s)**
Auto-Guide control switch is in the off position.	Auto-Guide control switch is in the back position.	Move the Auto-Guide control switch to the center position.

5.9 Machine Error Codes

5.9.1 Engine error codes

SA (Source Address), SPN (Suspect Parameter Number), FMI (Fault Mode Identifier)

Diagnostic codes for engine			
SA	SPN	FMI	Description
00	91	08	Decelerator pedal position abnormal sensor frequency
		13	Decelerator pedal position out of calibration
00	94	03	Engine fuel delivery pressure shorted to high source
		04	Engine fuel delivery pressure shorted to ground
		15	Engine fuel delivery pressure above normal operating range - least severe
		17	Engine fuel delivery pressure below normal operating range - least severe
00	100	01	Engine oil pressure below normal operating range - most severe
		03	Engine oil pressure shorted to high source
		04	Engine oil pressure shorted to ground
		10	Engine oil pressure abnormal rate of change
		17	Engine oil pressure below normal operating range - least severe
		18	Engine oil pressure below normal operating range - moderately severe
00	102	03	Engine intake manifold pressure shorted to high source
		04	Engine intake manifold pressure shorted to ground
		10	Engine intake manifold pressure abnormal rate of change
00	105	00	Engine intake manifold temperature above normal operating range - most severe
		03	Engine intake manifold temperature shorted to high source
		04	Engine intake manifold temperature shorted to ground
		15	Engine intake manifold temperature above normal operating range - least severe
		16	Engine intake manifold temperature above normal operating range - moderately severe
00	108	03	Barometric pressure shorted to high source
		04	Barometric pressure shorted to ground
00	110	00	Engine coolant temperature above normal operating range -most severe
		03	Engine coolant temperature shorted to high source
		04	Engine coolant temperature shorted to ground

Diagnostic codes for engine			
		15	Engine coolant temperature above normal operating range - least severe
		16	Engine coolant temperature above normal operating range - moderately severe
00	168	00	Battery potential above normal operating range - most severe
		01	Battery potential below normal operating range - most severe
		02	Battery potential erratic, intermittent, or incorrect
00	174	00	Engine fuel temperature above normal operating range - most severe
		03	Engine fuel temperature shorted to high source
		04	Engine fuel temperature shorted to ground
		15	Engine fuel temperature above normal operating range - least severe
		16	Engine fuel temperature above normal operating range - moderately severe
00	190	00	Engine speed above normal operating range - most severe
		08	Engine speed abnormal sensor frequency
		15	Engine speed above normal operating range - least severe
00	620	03	DC supply: - 5 volt DC supply shorted to high source
		04	DC supply: - 5 volt DC supply shorted to ground
00	626	05	Ether injection solenoid open circuit
		06	Ether injection solenoid shorted to ground
00	630	02	Configuration erratic, intermittent, or incorrect
00	631	02	Tractor model erratic, intermittent, or incorrect
00	637	13	Engine timing sensor out of calibration
00	639	09	Controller area network, abnormal update rate
00	651	05	Engine injector cylinder 1 open circuit
		06	Engine injector cylinder 1 shorted to ground
00	652	05	Engine injector cylinder 2 open circuit
		06	Engine injector cylinder 2 shorted to ground
00	653	05	Engine injector cylinder 3 open circuit
		06	Engine injector cylinder 3 shorted to ground
00	654	05	Engine injector cylinder 4 open circuit
		06	Engine injector cylinder 4 shorted to ground
00	655	05	Engine injector cylinder 5 open circuit
		06	Engine injector cylinder 5 shorted to ground
00	656	05	Engine injector cylinder 6 open circuit
		06	Engine injector cylinder 6 shorted to ground

Diagnostic codes for engine			
00	678	03	DC supply: - 8 volt DC supply shorted to high source
		04	DC supply: - 8 Volt DC supply shorted to ground
00	723	08	Engine speed sensor 2 abnormal sensor frequency
00	729	05	Engine inlet air heater 1 open circuit
		06	Engine inlet air heater 1 shorted to ground
00	1072	05	Engine compression brake low/high solenoid open circuit
		06	Engine compression brake low/high Solenoid shorted to ground
00	1073	05	Engine compression brake medium/high solenoid open circuit
		06	Engine compression brake medium/high solenoid shorted to ground
00	1079	03	DC supply: - 5 volt DC supply shorted to high source
		04	DC supply: - 5 volt DC supply shorted to ground

5.9.2 Transmission error codes

SA (Source Address), SPN (Suspect Parameter Number), FMI (Fault Mode Identifier)

Diagnostic codes for transmission			
SA	SPN	FMI	Description
03	96	03	Fuel level shorted to high source
		04	Fuel level shorted to ground
03	117	01	Brake accumulator pressure below normal operating range - most severe
03	126	31	Transmission oil filter bypass
03	127	01	Transmission oil pressure below normal operating range - most severe
03	161	02	Transmission input shaft speed erratic, intermittent, or incorrect
03	168	01	Battery potential below normal operating range - most severe
03	177	00	Transmission oil temperature above normal operating range - most severe
		03	Transmission oil temperature shorted to high source
		04	Transmission oil temperature shorted to ground
03	191	00	Transmission output shaft speed above normal operating range - most severe
		12	Transmission output shaft speed malfunction
03	473	03	Charge pressure sensor shorted to high source
		04	Charge pressure sensor shorted to ground
03	564	03	Differential lock solenoid shorted to high source

Diagnostic codes for transmission			
		05	Differential lock solenoid open circuit
		06	Differential lock solenoid shorted to ground
03	598	02	Inching pedal switch erratic, intermittent, or incorrect
		07	Inching pedal switch mechanical system not responding
		14	Inching pedal switch
03	617	03	Parking brake solenoid 2 shorted to high source
		05	Park brake solenoid 2 open circuit
		06	Park brake solenoid 2 shorted to ground
03	618	03	Park brake solenoid 1 shorted to high source
		05	Park brake solenoid 1 open circuit
		06	Park brake solenoid 1 shorted to ground
03	625	09	Proprietary network abnormal update rate
		12	Proprietary network malfunction
03	639	09	Controller area network abnormal update rate
03	677	03	Engine starter motor relay shorted to high source
		05	Engine starter motor relay open circuit
		06	Engine starter motor relay shorted to ground
03	678	03	DC supply: - 8 volt DC supply shorted to high source
		04	DC supply: - 8 volt DC supply shorted to ground
03	684	00	Inching pedal position above normal operating range - most severe
		01	Inching pedal position below normal operating range - most severe
		08	Inching pedal position abnormal sensor frequency
03	734	03	Transmission clutch solenoid 1 shorted to high source
		05	Transmission clutch solenoid 1 open circuit
		06	Transmission clutch solenoid 1 shorted to ground
03	735	03	Transmission clutch solenoid 2 shorted to high source
		05	Transmission clutch solenoid 2 open circuit
		06	Transmission clutch solenoid 2 shorted to ground
03	736	03	Transmission clutch solenoid 3 shorted to high source
		05	Transmission clutch solenoid 3 open circuit
		06	Transmission clutch solenoid 3 shorted to ground
03	737	03	Transmission clutch solenoid 4 shorted to high source
		05	Transmission clutch solenoid 4 open circuit
		06	Transmission clutch solenoid 4 shorted to ground
03	738	03	Transmission clutch solenoid 5 shorted to high source
		05	Transmission clutch solenoid 5 open circuit

Diagnostic codes for transmission			
		06	Transmission clutch solenoid 5 shorted to ground
03	739	03	Transmission clutch solenoid 6 shorted to high source
		05	Transmission clutch solenoid 6 open circuit
		06	Transmission clutch solenoid 6 shorted to ground
03	961	14	Clock alignment required
03	1638	00	Hydraulic oil temperature above normal operating range - most severe
		03	Hydraulic oil temperature shorted to high source
		04	Hydraulic oil temperature shorted to ground
03	1713	31	Implement oil filter bypass
03	1873	00	Rear hitch position above normal operating range - most severe
		01	Rear hitch position below normal operating range - most severe
		08	Rear hitch position abnormal sensor frequency
		13	Rear hitch position out of calibration
03	1883	13	PTO speed sensor out of calibration
03	2000	02	Engine ECM communication erratic, intermittent, or incorrect
03	2005	02	Armrest ECM communication erratic, intermittent, or incorrect
03	2602	14	Hydraulic oil level low
03	2613	01	Axle lubricate pressure low below normal operating range - most severe
		18	Axle lubricate pressure low below normal operating range - moderately severe
03	2833	14	Motion with park brake engaged
		31	Motion with park brake engaged
03	2858	02	Machine data configuration erratic, intermittent, or incorrect
03	2905	03	Transmission clutch solenoid 7 shorted to high source
		05	Transmission clutch solenoid 7 open circuit
		06	Transmission clutch solenoid 7 shorted to ground
03	2906	03	Transmission clutch solenoid 8 shorted to high source
		05	Transmission clutch solenoid 8 open circuit
		06	Transmission clutch solenoid 8 shorted to ground
03	2910	03	PTO clutch solenoid shorted to high source
		05	PTO clutch solenoid open circuit
		06	PTO clutch solenoid shorted to ground
03	2924	14	Secondary steering

Diagnostic codes for transmission			
03	3454	02	Rear fender PTO switch erratic, intermittent, or incorrect
03	3509	03	DC supply: - 5 volt DC supply shorted to high source
		04	DC supply: - 5 volt DC supply shorted to ground
03	3513	03	DC supply: - 10 volt DC supply shorted to high source
		04	DC supply: - 10 volt DC supply shorted to ground
03	3825	12	Transmission output shaft speed 2 malfunction
03	4056	03	Creeper solenoid shorted to high source
		05	Creeper solenoid open circuit
		06	Creeper solenoid shorted to ground
03	520192	14	Steering system malfunction
03	520256	14	Steering in wrong direction
03	520257	14	Uncommanded steering output
03	520258	14	No steering output found
03	520259	14	Excessive steering error
03	520386	03	Rear hitch raise solenoid shorted to high source
		05	Rear hitch raise solenoid open circuit
		06	Rear hitch raise solenoid shorted to ground
		12	Rear hitch raise solenoid malfunction
		13	Rear hitch raise solenoid out of calibration
03	520387	03	Rear hitch lower solenoid shorted to high source
		05	Rear hitch lower solenoid open circuit
		06	Rear hitch lower solenoid shorted to ground
		12	Rear hitch lower solenoid malfunction
		13	Rear hitch lower solenoid out of calibration
03	520581	31	Park brake excessive wear
03	520674	02	Transmission intermediate shaft speed sensor erratic, intermittent, or incorrect
03	520706	07	Park brake is not engaged mechanical system not responding
03	520726	03	Right steering solenoid shorted to high source
		05	Right steering solenoid open circuit
		06	Right steering solenoid shorted to ground
		13	Right steering solenoid out of calibration
03	520727	03	Left steering solenoid shorted to high source
		05	Left steering solenoid open circuit
		06	Left steering solenoid shorted to ground
		13	Left steering solenoid out of calibration

Diagnostic codes for transmission			
03	520967	02	Machine application code erratic, intermittent, or incorrect
		09	Machine application code abnormal update rate
03	521004	31	Brake charge oil filter bypass switch
03	521409	03	Transmission clutch solenoid 9 shorted to high source
		05	Transmission clutch solenoid 9 open circuit
		06	Transmission clutch solenoid 9 shorted to ground
03	521469	00	Steering motor speed sensor 1 above normal operating range - most severe
		01	Steering motor speed sensor 1 below normal operating range - most severe
		02	Steering motor speed sensor 1 erratic, intermittent, or incorrect
		08	Steering motor speed sensor 1 abnormal sensor frequency
03	521470	00	Steering motor speed sensor 2 above normal operating range - most severe
		01	Steering motor speed sensor 2 below normal operating range - most severe
		02	Steering motor speed sensor 2 erratic, intermittent, or incorrect
		08	Steering motor speed sensor 2 abnormal sensor frequency
03	521471	00	Steering wheel position sensor 1 above normal operating range - most severe
		01	Steering wheel position sensor 1 below normal operating range - most severe
		08	Steering wheel position sensor 1 abnormal sensor frequency
		12	Steering wheel position sensor 1 malfunction
		13	Steering wheel position sensor 1 out of calibration
03	521472	00	Steering wheel position sensor 2 above normal operating range - most severe
		01	Steering wheel position sensor 2 below normal operating range - most severe
		08	Steering wheel position sensor 2 abnormal sensor frequency
		12	Steering wheel position sensor 2 malfunction
		13	Steering wheel position sensor 2 out of calibration
03	521473	00	Steering wheel position sensor 3 above normal operating range - most severe
		01	Steering wheel position sensor 3 below normal operating range - most severe

Diagnostic codes for transmission			
		08	Steering wheel position sensor 3 abnormal sensor frequency
		12	Steering wheel position sensor 3 malfunction
		13	Steering wheel position sensor 3 out of calibration
03	521475	02	Rear fender hitch switch erratic, intermittent, or incorrect
03	521476	00	Rear hitch steer position sensor above normal operating range - most severe
		01	Rear hitch steer position sensor below normal operating range - most severe
		08	Rear hitch steer position sensor abnormal sensor frequency
		13	Rear hitch steer position sensor out of calibration
03	521760	03	Secondary steering solenoid shorted to high source
		05	Secondary steering solenoid open circuit
		06	Secondary steering solenoid shorted to ground

5.9.3 PVED error codes

SA (Source Address), SPN (Suspect Parameter Number), FMI (Fault Mode Identifier)

Diagnostic codes for PVED			
SA	SPN	FMI	Description
19	84	12	Wheel-based vehicle speed malfunction
19	611	00	Steering wheel position sensor above normal operating range - most severe
19	612	00	Steering wheel position redundant sensor above normal operating range - most severe
19	613	14	Steering wheel speed plausibility check failure
19	614	00	Steering spool valve above normal operating range - most severe
19	615	14	Steering controller critical failure
19	627	00	Power supply above normal operating range - most severe
19	627	04	Power supply shorted to ground
19	1079	00	DC supply: - 5 volt DC supply above normal operating range - most severe
19	1083	00	Articulation angle sensor above normal operating range - most severe
19	1083	04	Articulation angle sensor shorted to ground
19	1084	00	Steering ECM sensor 2 above normal operating range - most severe
19	1807	08	Steering wheel angle abnormal sensor frequency
19	1807	09	Steering wheel angle abnormal update rate

5.9.4 Armrest ECM error codes

SA (Source Address), SPN (Suspect Parameter Number), FMI (Fault Mode Identifier)

Diagnostic codes for armrest ECM			
SA	SPN	FMI	Description
05	69	02	Creeper switch erratic, intermittent, or incorrect
		03	Creeper switch shorted to high source
		04	Creeper switch shorted to ground
		05	Creeper switch open circuit
05	601	02	Cruise control switch erratic, intermittent, or incorrect (Constant Ground Speed)
		03	Cruise control switch shorted to high source (Constant Ground Speed)
		04	Cruise control switch shorted to ground (Constant Ground Speed)
		05	Cruise control switch open circuit (Constant Ground Speed)
05	639	19	Controller area network, not communicating
05	689	02	Differential lock switch erratic, intermittent, or incorrect
		03	Differential lock switch shorted to high source
		04	Differential lock switch shorted to ground
		05	Differential lock switch open circuit
05	898	00	Hand throttle sensor above normal operating range - most severe
		01	Hand throttle sensor below normal operating range - most severe
05	1231	19	Controller area network 2 not communicating
05	1235	19	Controller area network 3 not communicating
05	1504	31	Operator not present
05	1787	03	Maximum power switch shorted to high source
		04	Maximum power switch shorted to ground
		05	Maximum power switch open circuit
05	1875	00	Rear hitch lever sensor above normal operating range - most severe
		01	Rear hitch lever sensor below normal operating range - most severe
		03	Rear hitch lever sensor shorted to high source
		04	Rear hitch lever sensor shorted to ground
05	1894	02	PTO switch erratic, intermittent, or incorrect
		03	PTO switch shorted to high source

Diagnostic codes for armrest ECM			
		04	PTO switch shorted to ground
		05	PTO switch open circuit
05	1919	00	Auxiliary valve control sensor 1 above normal operating range - most severe
		03	Auxiliary valve control sensor 1 shorted to high source
		04	Auxiliary valve control sensor 1 shorted to ground
05	1931	00	Auxiliary valve control sensor 2 above normal operating range - most severe
		01	Auxiliary valve control sensor 2 below normal operating range - most severe
		03	Auxiliary valve control sensor 2 shorted to high source
		04	Auxiliary valve control sensor 2 shorted to ground
05	1943	00	Auxiliary valve control sensor 3 above normal operating range - most severe
		01	Auxiliary valve control sensor 3 below normal operating range - most severe
		03	Auxiliary valve control sensor 3 shorted to high source
		04	Auxiliary valve control sensor 3 shorted to ground
05	1955	00	Auxiliary valve control sensor 4 above normal operating range - most severe
		01	Auxiliary valve control sensor 4 below normal operating range - most severe
		03	Auxiliary valve control sensor 4 shorted to high source
		04	Auxiliary valve control sensor 4 shorted to ground
05	1967	00	Auxiliary valve control sensor 5 above normal operating range - most severe
		01	Auxiliary valve control sensor 5 below normal operating range - most severe
		03	Auxiliary valve control sensor 5 shorted to high source
		04	Auxiliary valve control sensor 5 shorted to ground
05	1979	00	Auxiliary valve control sensor 6 above normal operating range - most severe
		01	Auxiliary valve control sensor 6 below normal operating range - most severe
		03	Auxiliary valve control sensor 6 shorted to high source
		04	Auxiliary valve control sensor 6 shorted to ground
05	2000	02	Engine ECM communication, erratic, intermittent, or incorrect
05	2003	02	Transmission ECM communication, erratic, intermittent, or incorrect
05	2034	02	Armrest auxiliary ECM communication, erratic, intermittent, or incorrect

Diagnostic codes for armrest ECM			
05	2038	02	Virtual terminal ECM communication, erratic, intermittent, or incorrect
05	2161	02	Auxiliary valve 1 ECM communication, erratic, intermittent, or incorrect
05	2162	02	Auxiliary valve 2 ECM communication, erratic, intermittent, or incorrect
05	2163	02	Auxiliary valve 3 ECM communication, erratic, intermittent, or incorrect
05	2164	02	Auxiliary valve 4 ECM communication, erratic, intermittent, or incorrect
05	2165	02	Auxiliary valve 5 ECM communication, erratic, intermittent, or incorrect
05	2166	02	Auxiliary valve 6 ECM communication, erratic, intermittent, or incorrect
05	2170	02	Steerable hitch ECM communication, erratic, intermittent, or incorrect
05	2240	02	Armrest ISO11783 ECM communication, erratic, intermittent, or incorrect
05	2825	00	Forward / neutral / reverse lever sensor above normal operating range - most severe
		01	Forward / neutral / reverse lever sensor below normal operating range - most severe
05	2832	31	Operator not in operating station
05	2858	02	Machine data configuration erratic, intermittent, or incorrect
05	2970	02	Constant engine speed A switch erratic, intermittent, or incorrect
		03	Constant engine speed A switch shorted to high source
		04	Constant engine speed A switch shorted to ground
		05	Constant engine speed A switch open circuit
05	2971	03	Constant Engine speed B switch shorted to high source
		04	Constant Engine speed B switch shorted to ground
		05	Constant Engine speed B switch open circuit
05	3507	06	ECM power relay, shorted to ground
05	3510	03	DC supply: - 1.7 Volt DC supply, shorted to high Source
		04	DC supply: - 1.7 Volt DC supply, shorted to ground
05	3511	03	DC supply: - 3.3 Volt DC supply, shorted to high source
		04	DC supply: - 3.3 Volt DC supply, shorted to ground
05	3646	02	Park lever switch erratic, intermittent, or incorrect

Diagnostic codes for armrest ECM			
		03	Park lever switch shorted to high source
		04	Park lever switch shorted to ground
		05	Park lever switch open circuit
05	3652	02	Shift up switch erratic, intermittent, or incorrect
		03	Shift up switch shorted to high source
		04	Shift up switch shorted to ground
		05	Shift up switch open circuit
05	3653	02	Shift down switch erratic, intermittent, or incorrect
		03	Shift down switch shorted to high source
		04	Shift down switch shorted to ground
		05	Shift down switch open circuit
05	520193	02	One touch switch erratic, intermittent, or incorrect
		03	One touch switch shorted to high source
		04	One touch switch shorted to ground
		05	One touch switch open circuit
05	5243	02	Roading lockout switch erratic, intermittent, or incorrect
		03	Roading lockout switch shorted to high source
		04	Roading lockout switch shorted to ground
		05	Roading lockout switch open circuit
05	520196	31	High slip
05	520197	02	Autoguide engage switch erratic, intermittent, or incorrect
		03	Autoguide engage switch shorted to high source
		04	Autoguide engage switch shorted to ground
		05	Autoguide engage switch open circuit
05	521474	02	Rear hitch raise switch erratic, intermittent, or incorrect
		03	Rear hitch raise switch shorted to high source
		04	Rear hitch raise switch shorted to ground
		05	Rear hitch raise switch open circuit
05	521893	03	Rear hitch lower switch shorted to high source
		04	Rear hitch lower switch shorted to ground
		05	Rear hitch lower switch open circuit
05	521894	03	PTO disengage switch shorted to high source
		04	PTO disengage switch shorted to ground
		05	PTO disengage switch open circuit

5.9.5 Auxiliary valve one ECM error codes

SA (Source Address), SPN (Suspect Parameter Number), FMI (Fault Mode Identifier)

SA Diagnostic codes for Auxiliary valve one ECM			
SA	SPN	FMI	Description
161	158	00	Key switch battery voltage, above normal operating range - most severe
161	158	18	Key switch battery voltage, below normal operating range - moderately severe
161	628	12	Program memory, malfunction
161	639	19	Controller area network, not communicating
161	701	05	Auxiliary valve proportional solenoid, open circuit
161	701	06	Auxiliary valve proportional solenoid, shorted to ground
161	702	05	Auxiliary valve proportional solenoid, open circuit
161	702	06	Auxiliary valve proportional solenoid, shorted to ground

5.9.6 Auxiliary valve two ECM error codes

SA (Source Address), SPN (Suspect Parameter Number), FMI (Fault Mode Identifier)

Diagnostic codes for Auxiliary valve two ECM			
SA	SPN	FMI	Description
162	158	00	Key switch battery voltage, above normal operating range - most severe
162	158	18	Key switch battery voltage, below normal operating range - moderately severe
162	628	12	Program memory, malfunction
162	639	19	Controller area network, not communicating
162	701	05	Auxiliary valve proportional solenoid, open circuit
162	701	06	Auxiliary valve proportional solenoid, shorted to ground
162	702	05	Auxiliary valve directional solenoid, open circuit
162	702	06	Auxiliary valve directional solenoid, shorted to ground

5.9.7 Auxiliary valve three ECM error codes

SA (Sourcer Address), SPN (Suspect Parameter Number), FMI (Fault Mode Identifier)

SA Diagnostic codes for Auxiliary valve three ECM			
SA	SPN	FMI	Description
163	158	00	Key switch battery voltage, above normal operating range - most severe
163			

SA Diagnostic codes for Auxiliary valve three ECM			
	158	18	Key switch battery voltage, below normal operating range - moderately severe
163	628	12	Program memory, malfunction
163	639	19	Controller area network, not communicating
163	701	05	Auxiliary valve proportional solenoid, open circuit
163	701	06	Auxiliary valve proportional solenoid, shorted to ground
163	702	05	Auxiliary valve directional solenoid, open circuit
163	702	06	Auxiliary valve directional solenoid, shorted to ground

5.9.8 Auxiliary valve four ECM error codes

SA (Source Address), SPN (Suspect Parameter Number), FMI (Fault Mode Identifier)

SA Diagnostic codes for Auxiliary valve four ECM			
SA	SPN	FMI	Description
164	158	00	Key switch battery voltage, above normal operating range - most severe
164	158	18	Key switch battery voltage, below normal operating range - moderately severe
164	628	12	Program memory, malfunction
164	639	19	Controller area network, not communicating
164	701	05	Auxiliary valve proportional solenoid, open circuit
164	701	06	Auxiliary valve proportional solenoid, shorted to ground
164	702	05	Auxiliary valve directional solenoid, open circuit
164	702	06	Auxiliary valve directional solenoid, shorted to ground

5.9.9 Auxiliary valve five ECM error codes

SA (Source Address), SPN (Suspect Parameter Number), FMI (Fault Mode Identifier)

SA Diagnostic codes for Auxiliary valve five ECM			
SA	SPN	FMI	Description
165	158	00	Key switch battery voltage, above normal operating range - most severe
165	158	18	Key switch battery voltage, below normal operating range - moderately severe
165	628	12	Program memory, malfunction
165	639	19	Controller area network, not communicating

SA Diagnostic codes for Auxiliary valve five ECM			
165	701	05	Auxiliary valve proportional solenoid, open circuit
165	701	06	Auxiliary valve proportional solenoid, shorted to ground
165	702	05	Auxiliary valve directional solenoid, open circuit
165	702	06	Auxiliary valve directional solenoid, shorted to ground

5.9.10 Auxiliary valve six ECM error codes

SA (Source Address), SPN (Suspect Parameter Number), FMI (Fault Mode Identifier)

SA Diagnostic codes for Auxiliary valve six ECM			
SA	SPN	FMI	Description
166	158	00	Key switch battery voltage, above normal operating range - most severe
166	158	18	Key switch battery voltage, below normal operating range - moderately severe
166	628	12	Program memory, malfunction
166	639	19	Controller area network, not communicating
166	701	05	Auxiliary valve proportional solenoid, open circuit
166	701	06	Auxiliary valve proportional solenoid, shorted to ground
166	702	05	Auxiliary valve directional solenoid, open circuit
166	702	06	Auxiliary valve directional solenoid, shorted to ground

5.9.11 Front lighting ECM error codes

SA (Source Address), SPN (Suspect Parameter Number), FMI (Fault Mode Identifier)

Diagnostic codes for front lighting ECM			
SA	SPN	FMI	Description
208	2208	02	Front lighting ECM address unknown
208	2354	05	Front work lights, open circuit
		06	Front work lights, short to ground
208	2368	05	Left turn signal light, open circuit
		06	Left turn signal light, shorted to ground
208	2370	05	Right turn signal light, open circuit
		06	Right turn signal light, shorted to ground
208	2653	05	Headlamp left low beam open circuit
		06	Headlamp left low beam short to ground

Diagnostic codes for front lighting ECM			
208	2655	05	Headlamp right low beam open circuit
		06	Headlamp right low beam short to ground
208	4011	05	Headlamp high beam open circuit
		06	Headlamp high beam short to ground

5.9.12 Roof lighting ECM error codes

SA (Source Address), SPN (Suspect Parameter Number), FMI (Fault Mode Identifier)

Diagnostic codes for roof lighting ECM			
SA	SPN	FMI	Description
209	882	05	License plate lamp, open circuit
		06	License plate lamp, shorted to ground
209	2209	02	Roof lighting ECM communication, erratic, intermittent, or incorrect
209	2362	05	Rear high mounted work light, open circuit
		06	Rear high mounted work light, shorted to ground
209	2368	05	Left turn signal light, open circuit
		06	Left turn signal light, shorted to ground
209	2370	05	Right turn signal light, open circuit
		06	Right turn signal light, shorted to ground
209	2386	05	Rotating beacon light, open circuit
		06	Rotating beacon light, shorted to ground
209	2873	02	Work light switch erratic, intermittent or incorrect
209	2875	02	Hazard light switch erratic, intermittent or incorrect
209	3507	06	ECM power relay, shorted to ground
209	3508	05	Main power relay, open circuit
		06	Main power relay, shorted to ground
209	3976	06	Dome light, shorted to ground

5.9.13 Rear lighting ECM error codes

SA (Source Address), SPN (Suspect Parameter Number), FMI (Fault Mode Identifier)

Diagnostic codes for rear lighting ECM			
SA	SPN	FMI	Description
210	46	00	Pneumatic supply pressure above normal operating range
		01	Pneumatic supply pressure below normal operating range

Diagnostic codes for rear lighting ECM			
		03	Pneumatic supply pressure shorted to high source
		04	Pneumatic supply pressure shorted to ground
210	1083	00	Left track tension sensor, above normal operating range - most severe
		01	Left track tension sensor, below normal operating range - most severe
		03	Left track tension sensor, shorted to high source - most severe
		04	Left track tension sensor, shorted to ground
210	1084	00	Right track tension sensor above normal operating range - most severe
		01	Right track tension sensor below normal operating range - most severe
		03	Right track tension sensor shorted to high source - most severe
		04	Right track tension sensor shorted to ground
210	2210	02	Rear lighting ECM address
210	2360	05	Rear low mounted work lights open circuit
		06	Rear low mounted work lights shorted to ground
210	2368	05	Left turn signal light, open circuit
		06	Left turn signal light, shorted to ground
210	2370	05	Right turn signal light, open circuit
		06	Right turn signal light, shorted to ground
210	2376	05	Stop light open circuit
		06	Stop light shorted to ground
210	2392	05	Back up light / alarm / horn open circuit
		06	Back up light / alarm / horn shorted to ground
210	2404	05	Running lights open circuit
		06	Running lights shorted to ground

6. Specifications

6.1 Engine specifications - MT900E . . . 325
6.2 Torque specifications . . . 326
6.2.1 Constant torque hose clamps . . . 326
6.3 Machine dimensions MT900E . . . 327
6.4 Machine specifications . . . 330
6.4.1 Machine specifications MT900E . . . 330
6.4.2 Shipping weights MT900E . . . 332
6.5 Special tools . . . 334
6.5.1 Collet torque wrench extension AG332273 . . . 334
6.5.2 Spacer torque wrench extension AG332274 . . . 335
6.5.3 Single wheel bolt wrench AG332275 . . . 337
6.5.4 Wheel bolt 36 mm wrench AG332272 . . . 339
6.5.5 Wheel guide stud AG332311 . . . 340

6.1 Engine specifications - MT900E

MT955E	MT965E	MT975E
AP168-4, aftertreatment system, wastegate turbo, air to air intercooled, 12 cylinders, twin series turbo chargers		
365 kW (490 hp)	403 kW (540 hp)	440 kW (590 hp)
standard maximum power		
394 kW (529 hp)	435 kW (583 hp)	475 kW (637 hp)
torque at rated power		
1660 Nm (1226 lbf ft)	1830 Nm (1351 lbf ft)	2000 Nm (1476 lbf ft)
maximum torque		
2360 Nm (1741 lbf ft)	2600 Nm (1918 lbf ft)	2840 Nm (2096 lbf ft)
high idle		
2200 rpm in gears 1-15 forward, neutral, reverse, park; 2300 rpm in 16th gear forward	2200 rpm in gears 1-15 forward, neutral, reverse, park; 2300 rpm in 16th gear forward	2200 rpm in gears 1-15 forward, neutral, reverse, park; 2300 rpm in 16th gear forward
governed speed at rated power		
2100 rpm	2100 rpm	2100 rpm
low idle		
1000 rpm	1000 rpm	1000 rpm
electrical system		
12 V	12 V	12 V
maximum altitude at full power		
2000 m (6560 ft)	2000 m (6560 ft)	2000 m (6560 ft)
bore and stroke		
111 mm x 145 mm (4.37 in x 5.71 in)	111 mm x 145 mm (4.37 in x 5.71 in)	111 mm x 145 mm (4.37 in x 5.71 in)
displacement		
1025 cu in (16.8 L)	1025 cu in (16.8 L)	1025 cu in (16.8 L)

6.2 Torque specifications

WARNING: *Mismatched or incorrect fasteners can cause damage or malfunction, or personal injury. Take care to avoid mixing metric dimensioned fasteners and inch dimensioned fasteners.*

Exceptions to these torques are in the service manual, if necessary.

Before installation of any hardware, make sure the components are in near new condition. Bolts and threads must not be worn or damaged. Threads must not have burrs or nicks. Hardware must be free of rust and corrosion. Clean hardware with a non corrosive cleaner.

Do not lubricate the fastener threads except for rust preventive. Rust preventive should be applied by supplier of that component for purposes of shipping and storage. Other applications for lubricating components may also be specified in service manual.

6.2.1 Constant torque hose clamps

Because of extreme temperature changes, hose will heat set. Heat setting can cause hose clamps to loosen. Loose hose clamps can cause leaks and cause component failures. Constant torque hose clamp will help prevent these failures.

Constant torque hose clamp is installed correctly under the following conditions:

- Screw tip (1) extends 6.35 mm (.25 in) (A) beyond housing.
- Belleville springs are collapsed nearly flat after screw (2) is tightened to a torque of 11 Nm (8.1 lbf ft) .

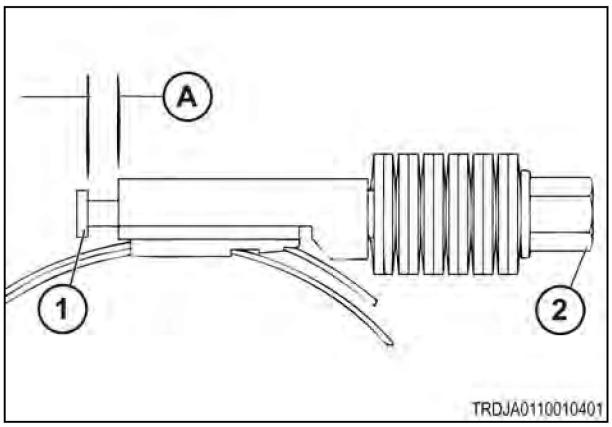

Fig. 1

6.3 Machine dimensions MT900E

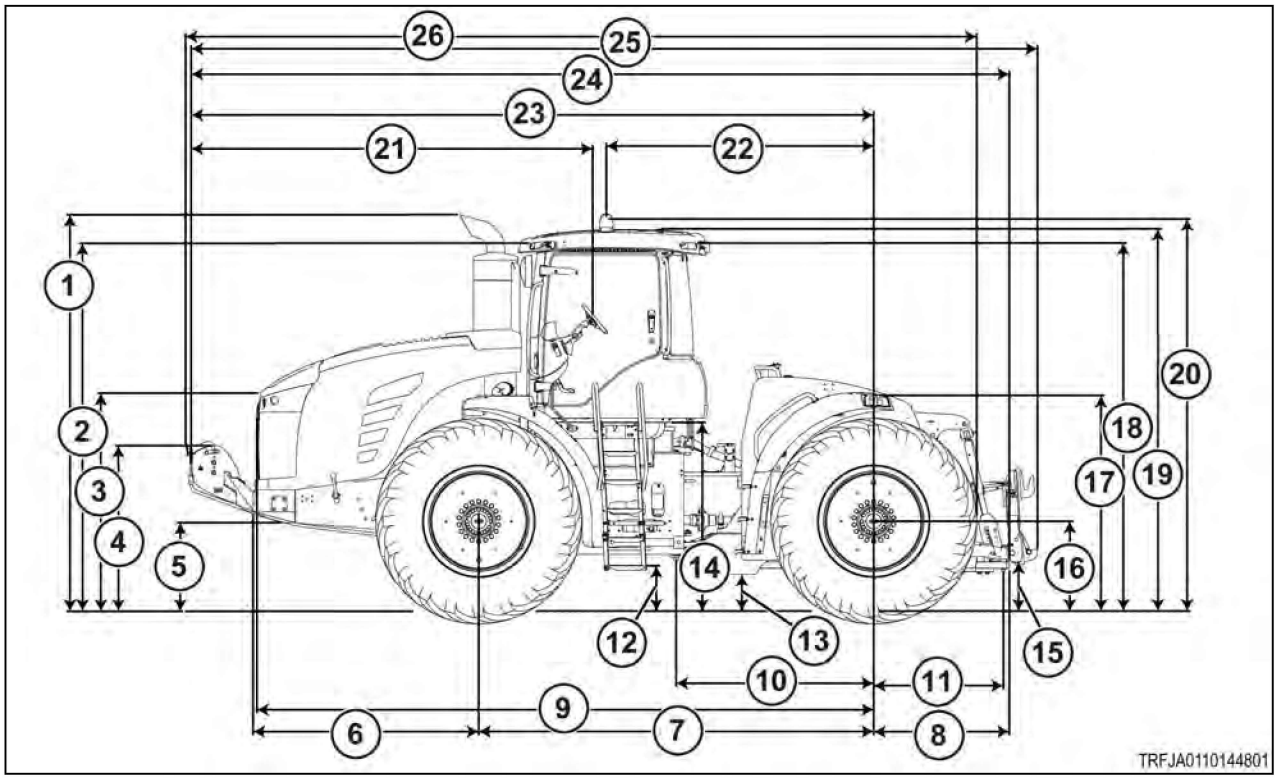

Fig. 2

Machine dimensions			
1	4044 mm (159 in)	16	901 mm (35 in)
2	3674 mm (145 in)	17	2155 mm (85 in)
3	2181 mm (86 in)	18	3674 mm (145 in)
4	1657 mm (65 in)	19	3800 mm (150 in)
5	886 mm (35 in)	20	3969 mm (156 in)
6	2255 mm (89 in)	21	4020 mm (158 in)
7	3950 mm (156 in)	22	2675 mm (105 in)
8	1356 mm (53 in)	23	6824 mm (269 in)
9	6103 mm (240 in)	24	8180 mm (322 in)
10	1973 mm (78 in)	25	8459 mm (333 in)
11	1296 mm (51 in)	26	7952 mm (313 in)
12	455 mm (18 in)		
13	343 mm (14 in)		
14	1889 mm (74 in)		
15	495 mm (19 in)		

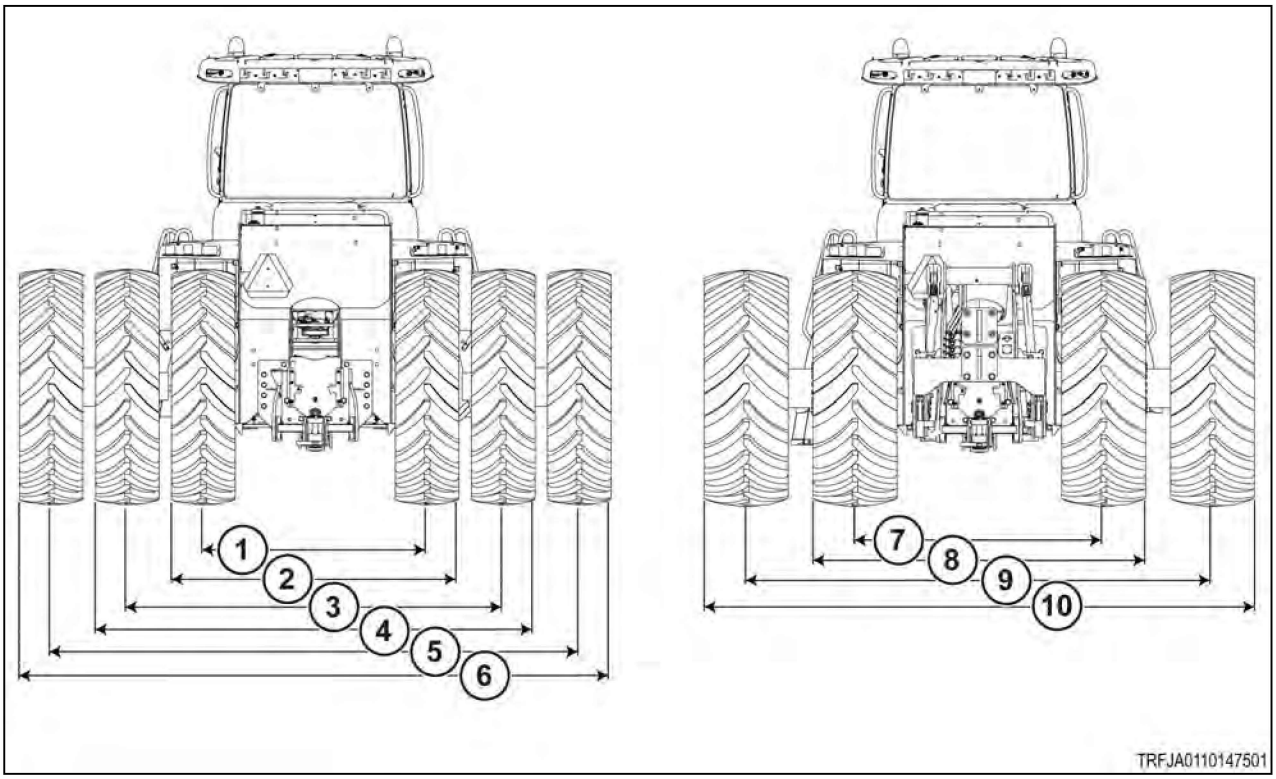

Fig. 3

Machine widths	
Callout	**Description**
1	Single center to center
2	Single width
3	Dual center to center
4	Dual width
5	Triple center to center
6	Overall width
7	Single center to center
8	Single width
9	Dual center to center
10	Overall width

Tire Size	Overall width	Triple C to C	Dual width	Dual C to C	Single width	Single C to C	Height
Triples							
480/80 R46	5104 mm (200.9 in)	4619 mm (181.8 in)	3772 mm (148.5 in)	3287 mm (129.4 in)	2442 mm (96.1 in)	1957 mm (77.04 in)	3800 mm (149.6 in)
480/80 R50	5139 mm (202.3 in)	4657 mm (183.3 in)	3808 mm (149.9 in)	3325 mm (130.9 in)	2410 mm (94.8 in)	1919 mm (75.5 in)	3800 mm (149.6 in)
520/85 R42	5175 mm (203.7 in)	4621 mm (181.9 in)	3843 mm (151.2 in)	3290 mm (129.5 in)	2508 mm (98.7 in)	1954 mm (76.9 in)	3800 mm (149.6 in)

Tire Size	Overall width	Triple C to C	Dual width	Dual C to C	Single width	Single C to C	Height
520/85 R46	5175 mm (203.7 in)	4619 mm (181.8 in)	3844 mm (151.3 in)	3287 mm (129.4 in)	2513 mm (98.9 in)	1957 mm (77.04 in)	3800 mm (149.6 in)
Duals							
620/70 R46	4315 mm (169.8 in)		N/A	3690 mm (145.2 in)	2691 mm (105.9 in)	2066 mm (81.3 in)	3800 mm (149.6 in)
650/85 R38	4520 mm (177.9 in)		N/A	3835 mm (150.9 in)	2835 mm (111.6 in)	2149 mm (84.6 in)	3800 mm (149.6 in)
710/70 R42	4813 mm (189.4 in)		N/A	4079 mm (160.5 in)	2910 mm (114.5 in)	2175 mm (85.6 in)	3800 mm (149.6 in)
710/70 R42 S/A	4966 mm (195.5 in)		N/A	4230 mm (166.5 in)	3062 mm (120.5 in)	2327 mm (91.6 in)	3800 mm (149.6 in)
710/70 R38	4911 mm (193.3 in)		N/A	4192 mm (165 in)	2876 mm (113.2 in)	2157 mm (84.9 in)	3800 mm (149.6 in)
800/70 R38	5094 mm (200.5 in)		N/A	4296 mm (169.1 in)	3060 mm (120.4 in)	2260 mm (88.9 in)	3800 mm (149.6 in)
Single							
35.5L-32	3550 mm (139.8 in)					2650 mm (104.3 in)	3800 mm (149.6 in)
1100 45/R46	3650 mm (143.7 in)					2596 mm (102.2 in)	3840 mm mm (151.2 in)

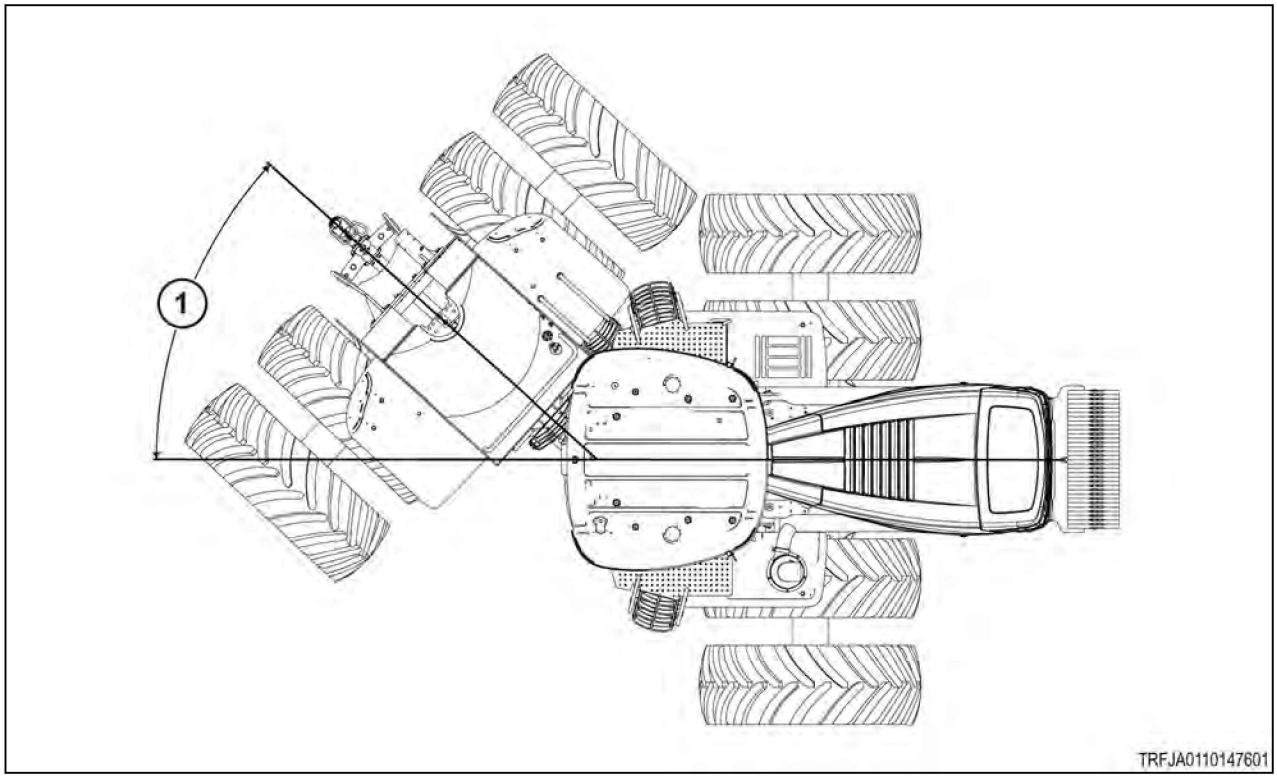

Fig. 4

The radius of the articulation (1) is 42 degrees.

6.4 Machine specifications

6.4.1 Machine specifications MT900E

Machine specifications MT900E	
Transmission	Transmission is a direct drive full power shift.
	Transmission has the following standard features: • 16 forward gears • Four reverse gears • Seven rotating countershaft clutches, two stationary planetary clutches • Programmable electronic controls • All gears accessible with use of a single hand lever forward/reverse
Electrical system	Standard lighting package consists of the following lights: • Four headlamps are mounted on the front of the hood for roading. • Two side work lamps are mounted on the front of the hood. • Two front work lamps are mounted between the mirror supports. • Two work lamps are mounted in the rear fenders. • Two work lamps are mounted on the rear roof of the machine. • Machine has hazard lamps and turn signals. • Three exterior courtesy lamps are mounted in the over hang of cab roof.
	Deluxe lighting package consists of standard lighting package in addition to the following lamps: • Four additional work lamps are mounted on the rear roof of the machine.
	Power output: trailer hookup - 7 pin connector at rear of machine
	Batteries: four 12 volt maintenance free GP31
	Alternator capacity: 150 Amps each (quantity two)
High Intensity Discharge (HID) Lighting (Optional)	• Two headlamps on the front of the hood • Two side work lamps on the front of the hood • Two work lamps on the rear roof
Brakes	Machine uses oil cooled multi-disc brakes. Located at each wheel of machine is one multiple disc brake. The brakes are actuated by service brake pedal.
	Parking brake is an oil cooled multi-disc brake. Parking brake works on input shaft for differential steer unit.

Machine specifications MT900E	
Hydraulic System	Implement hydraulic system has the following characteristics: • Closed center • Load sensing • Pressure and flow compensating pump
	Hydraulic pump for implement hydraulic system • Type - variable displacement axial piston pump • Maximum flow - 220 liter/min (58 gal/min) and 322 liter/min (85 gal/min) • Maximum pressure - 20 000 kPa (2900 psi)
Steering system	Machine is equipped with an articulated steering system. The machine pivots in the center to control the direction of travel. Steering system consists of the following components: • Two steering cylinders • Steering/priority valve • Steering unit
3-point linkage	3-point linkage is electronically controlled. 3-point linkage will receive category III, category IVN, and category IV implements. Lift Capacity for non-steerable 3-point linkage. All models • Category III and IVN 8845 kg (19 500 lb) • Category IV 8845 kg (19 500 lb)
Power Take Off	Machine is equipped with an optional electronically modulated 1000 RPM power take-off (PTO). This PTO shaft is a 44.5 mm (1.75 in) 20 tooth spline and the PTO shaft is a fixed shaft.
Drawbar - CAT IV, (optional), CAT V (standard)	Standard drawbar can be permitted to swing or can be in a fixed position.
DEF tank	Tank sized for one DEF fill for every three fuel fills based on standard fuel capacity. Actual DEF fill will vary with engine load. Tank fill capacity 198 L (52.4 gal).
Drivelines	Transmission: 9C size, permanently lubricated U-joint
	Front axle: 9C size, permanently lubricated U-joint, and slip joint

Machine specifications MT900E	
	Rear axle: 9C, permanently lubricated U-joint, and greasable support bearing
	Articulation: 9C, permanently lubricated U-joint, and greasable slip joint
Engine block heater	Warms engine coolant to make cold weather starts easier, 120 volt or 240 volt

Drawbar capacity		
The vertical weight capacity of the drawbar is dependent on the category.		
	Distance from PTO shaft to the hold for the drawbar pin	Maximum down force
Category IV	500 mm (19.7 in)	4536 kg (10 000 lb)
Category V	500 mm (19.7 in)	5670 kg (12 500 lb)
NOTE: *Drawbar can be permitted to swing or can be in a fixed position.*		

Tire size	Rolling circumference mm (in)
480/80 R46	5842 mm (230 in)
520/85 R42	
710/70 R38	
480/80 R50	6172 mm (243 in)
520/85 R46	
620/70 R46	
650/85 R38	
710/70 R42	
800/70 R38	
1100/45 R46	6375 mm (251 in)

6.4.2 Shipping weights MT900E

Weight chart				
Configuration	Shipping		Estimated operating axle weight percentages	
	kg (mass)	lb	front	rear
Standard	18 400	40 530	61	39
With front counter weight bracket	18 900	41 650	63	37
With front counter weight GP 20 weights	19 800	43 670	68	32

Weight chart				
With front counter weight GP 32 weights	20 400	44 890	71	29
With full front and four factory installed weights on rear axle	21 300	46 890	68	32
Standard with four factory installed rear weights	19 300	42 530	58	42
Shipping weight includes at least 300 L (79.2 gal) fuel - No hubs for duals. No spacer or dual/triple. Weight is based on 710/70 R42 tires averaged weight of all tire manufacturers.				

6.5 Special tools

6.5.1 Collet torque wrench extension AG332273

Description	Part number	Vendor	Where used	Mandatory
Collet hex wrench 30 mm 	332273	K-Line Industries, Inc.	Wheels	Mandatory
NOTE: *This tool is used to check the inner wheel hub collet bolt torque on the machines equipped with dual and triple wheel arrangements.*				

Collet torque wrench extension AG332273				
Torque Wrench Length	Torque Wrench Length	Angle From Straight	Torque Wrench Setting	Torque Wrench Setting
cm	in	degrees	Nm	lbf ft
76	30	0	344	254
76	30	45	383	283
76	30	90	528	390
89	35	0	362	267
89	35	45	399	294
89	35	90	528	390
102	40	0	377	278
102	40	45	411	304
102	40	90	528	390
114	45	0	389	287
114	45	45	422	311
114	45	90	528	390
127	50	0	400	295
127	50	45	430	318
127	50	90	528	390
140	55	0	409	302
140	55	45	438	323
140	55	90	528	390
152	60	0	417	307
152	60	45	444	328
152	60	90	528	390

Collet torque wrench extension AG332273				
165	65	0	424	313
165	65	45	450	332
165	65	90	528	390
178	70	0	430	317
178	70	45	455	335
178	70	90	528	390

6.5.2 Spacer torque wrench extension AG332274

Description	Part number	Vendor	Where used	Mandatory
Straight wrench 	332274	K-Line Industries, Inc.	Wheels	Mandatory

NOTE:
This tool is used to check the bolt torque for the outer wheel and the spacer hub on the machines equipped with dual or triple wheel arrangements.

Spacer torque wrench extension AG332274				
Torque Wrench Length	**Torque Wrench Length**	**Angle From Straight**	**Torque Wrench Setting**	**Torque Wrench Setting**
cm	**in**	**degrees**	**Nm**	**lbf ft**
30	12	0	782	577
30	12	45	814	601
30	12	90	901	665
35	14	0	797	588
35	14	45	825	609
35	14	90	901	665
40	16	0	809	597
40	16	45	834	615
40	16	90	901	665
45	18	0	818	604
45	18	45	841	621
45	18	90	901	665
50	20	0	826	610
50	20	45	847	625
50	20	90	901	665
55	22	0	832	614

Spacer torque wrench extension AG332274				
55	22	45	851	628
55	22	90	901	665
60	24	0	838	618
60	24	45	855	631
60	24	90	901	665
65	26	0	842	621
65	26	45	859	634
65	26	90	901	665
70	28	0	846	624
70	28	45	861	636
70	28	90	901	665
76	30	0	782	577
76	30	45	814	601
76	30	90	901	665
89	35	0	797	588
89	35	45	825	609
89	35	90	901	665
102	40	0	809	597
102	40	45	834	615
102	40	90	901	665
114	45	0	818	604
114	45	45	841	621
114	45	90	901	665
127	50	0	826	610
127	50	45	847	625
127	50	90	901	665
140	55	0	832	614
140	55	45	851	628
140	55	90	901	665
152	60	0	838	618
152	60	45	855	631
152	60	90	901	665
165	65	0	842	621
165	65	45	859	634
165	65	90	901	665
178	70	0	846	624
178	70	45	861	636
178	70	90	901	665

6.5.3 Single wheel bolt wrench AG332275

Description	Part number	Vendor	Where used	Mandatory
Single wheel bolt wrench 36 mm 	332275	K-Line Industries, Inc.	Wheels	Mandatory

NOTE:
This tool is used to check the torque for the wheel bolts on the machines equipped with the single tire arrangement.

Single Wheel Bolt Wrench (PN AG332275)				
Torque Wrench Length	**Torque Wrench Length**	**Angle From Straight**	**Torque Wrench Setting**	**Torque Wrench Setting**
cm	**in**	**degrees**	**Nm**	**lbf ft**
30	12	0	813	600
30	12	45	837	618
30	12	90	901	665
35	14	0	825	608
35	14	45	846	624
35	14	90	901	665
40	16	0	833	615
40	16	45	852	629
40	16	90	901	665
45	18	0	840	620
45	18	45	857	633
45	18	90	901	665
50	20	0	846	624
50	20	45	861	636
50	20	90	901	665
55	22	0	851	628
55	22	45	865	638
55	22	90	901	665
60	24	0	855	631
60	24	45	868	640
60	24	90	901	665
65	26	0	858	633

Single Wheel Bolt Wrench (PN AG332275)				
65	26	45	870	642
65	26	90	901	665
70	28	0	861	635
70	28	45	872	644
70	28	90	901	665
76	30	0	813	600
76	30	45	837	618
76	30	90	901	665
89	35	0	825	608
89	35	45	846	624
89	35	90	901	665
102	40	0	833	615
102	40	45	852	629
102	40	90	901	665
114	45	0	840	620
114	45	45	857	633
114	45	90	901	665
127	50	0	846	624
127	50	45	861	636
127	50	90	901	665
140	55	0	851	628
140	55	45	865	638
140	55	90	901	665
152	60	0	855	631
152	60	45	868	640
152	60	90	901	665
165	65	0	858	633
165	65	45	870	642
165	65	90	901	665
178	70	0	861	635
178	70	45	872	644
178	70	90	901	665

6.5.4 Wheel bolt 36 mm wrench AG332272

Description	Part number	Vendor	Where used	Mandatory
Wheel bolt wrench 36 mm 	332272	K-Line Industries, Inc.	Wheels	Mandatory

NOTE:
This tool is used to check the inner wheel bolt torque on the machines equipped with dual and triple wheel arrangements.

Wheel torque wrench extension AG332272				
Torque wrench length	**Torque wrench length**	**Angle from straight**	**Torque wrench setting**	**Torque wrench setting**
cm	**in**	**degrees**	**Nm**	**lbf ft**
76	30	0	711	525
76	30	45	758	559
76	30	90	901	665
89	35	0	733	541
89	35	45	776	572
89	35	90	901	665
102	40	0	751	554
102	40	45	789	583
102	40	90	901	665
114	45	0	765	565
114	45	45	800	591
114	45	90	901	665
127	50	0	777	573
127	50	45	809	597
127	50	90	901	665
140	55	0	787	581
140	55	45	817	603
140	55	90	901	665
152	60	0	795	587
152	60	45	823	608
152	60	90	901	665
165	65	0	802	592

Wheel torque wrench extension AG332272				
165	65	45	829	612
165	65	90	901	665
178	70	0	809	597
178	70	45	834	615
178	70	90	901	665

6.5.5 Wheel guide stud AG332311

Description	Part number	Vendor	Where used	Mandatory
Wheel guide stud 	332311	K-Line Industries, Inc.	Wheels	Mandatory

NOTE:
This tool is used to help with installation of the tires/wheels. Quantity one of this part number includes two guide studs.

Index

12 volt 45
3-point linkage 173
3-point linkage control lever .....
adjusting 174
3-point linkage screens 128
3-point linkage switch .....
external 175
3-point linkage troubleshooting 299

A

accumulator without pressure 169
adjusting .....
3-point linkage control lever 174
drawbar position 181
top link .....
adjusting 176
adjusting the draft arm 176
air compressor .....
air hose connection 136
air filter .....
cleaning 255
engine 229
air system operation 136
alternate exit 39
applications 103
armrest adjustment .....
armrest 86
articulation joint 258
articulation lock 34
asbestos 16
Auto-guide 304
Auto-Guide 303, 304
automatic temperature .....
controls 93
automatic temperature control unit .....
retrieving diagnostic information 285
Auxiliary assignment .....
Selecting an auxiliary input 104
auxiliary implement control valve bank 159
auxiliary power switch 162

B

backlighting .....
cab switches 78
ballasting .....
ballasting guide lines 184
ballasting packages 185
ballasting work sheet 189
general guide lines 184
heavy vertical hitch loads 187
power hop control 184
special application machine recommendations ....
185
tire inflation guide 192
tire pressure 184
towed scrapers 208
weight splits 185
basic towing 167
batteries .....
installing 280
removing 278
battery disconnect switch 162
battery explosion 44
before operation 17
before starting the engine 17
belt routing 27
blue tooth microphone 84
brake control 142
brake troubleshooting 289
breather 249, 253
Burn prevention 21

C

cab .....
switches 76
cab air conditioning 27
cab filter .....
maintenance 254
cab safety signs 37
center wheel .....
removal 263
changing 245
chassis safety signs 32
checking .....
engine oil level 225
checking the engine coolant level .....
coolant level 239
chemical tank attachment 211
cleaning the cooling cores .....
cooling system 238
Collet torque wrench extension .....
tooling 334
connecting a grain cart with an auger motor 153
connecting a hydraulic motor to power beyond .....
power beyond 158
connecting hoses .....
hydraulic control valve 150
quick couplers 150
connecting hydraulic motors to the control valves . 152
connecting the air seeder or the grain drill .....
constant down pressure 155
connecting the auxiliary control valve with load sensing
..... 159
connecting the auxiliary implement control valve .....
without load sensing 159
connecting the auxiliary implement controls 157
connecting the hydraulic motor with the flow control
valve 160
connecting the implement .....
quick hitch 171
Connecting the implement .....
3-point linkage 171
connecting the spray system pump 157
connecting the vacuum planter .....

pull type 155
console controls 173
constant torque hose clamps 326
coolant sample 239
coolant system fluid 239
coolant warning 21
cooling system additives 240
courtesy lamp 75
crush hazard 35
cut and crush prevention 19

D

dash panel 79
decal .....
oil level 42
decimal display .....
setting 100
DEF approved containers 237
DEF storage and shelf life 237
DEF tank 237
deluxe heated vented seat .....
operator seat 88
diesel exhaust fluid tank 237
differential lock 138
dimensions 327
disconnecting .....
implement from the quick hitch 173
disconnecting the implement .....
3-point linkage 171
dismounting the machine 16
disposal of waste 54
door handle 38
double acting cylinders 152
draining the engine coolant 240
drawbar 179
drawbar implements .....
connecting 179
drawbar position .....
adjusting 181
drivelines grease point locations 259
DTC stored or active 127

E

electrical ground 45
electrical storm 16
electrical system troubleshooting 288
emission control warranty statement .....
United States and Canada 56
California 59
engine .....
no load, low load 72
start switch 71
terminal 105
engine air cleaner 30
engine belts .....
belts 228
engine cover .....
opening 230
engine maintenance .....
chart 216
engine oil filter 27, 30
engine oil level .....
checking 225
engine oil sample port 228
engine oil sign 31
engine safety signs 26
engine specifications 325
engine starting .....
normal conditions 69
engine starting with jumper cables 70
engine temperature 229
engine troubleshooting 291
equipment 16
error codes armrest 314
error codes auxiliary valve one 318
error codes engine 306
error codes for Auxiliary valve five ECM 319
error codes for Auxiliary valve four ECM 319
error codes for Auxiliary valve six ECM 320
error codes for Auxiliary valve three ECM 318
error codes for Auxiliary valve two ECM 318
error codes for front lighting ECM 320
error codes for rear lighting ECM 321
error codes for roof lighting ECM 321
error codes PVED 313
error codes transmission 308
ether 30
exhaust fumes 22
exterior courtesy lamps 77
extremity arm pivots grease point locations 261
extremity lamps 75

F

fall hazard 35
fall off hazard 39
fill capacities 215
filling .....
diesel exhaust fluid tank 237
fire and explosion prevention 23
fire extinguisher 24
fluid penetration 22
flushing the cooling system 241
front weights .....
installing 199
removing 197
Fuel 232
fuel cap 235
fuel filter .....
changing 232
fuel system .....
filling 231
fuel tank breather 235
fuel tank water and sediment .....
draining 234
fuse / relays 44
fuse block one 220
fuse block two 221
Fuse panel 222, 223

G

general hazard information 15
grease points .....
power take-off 261

H

headland management .....
icon identification 125
heating and air conditioning troubleshooting 285
High pressure lines 21
home screen display 96
horn 82
hub and collet .....
installing 274
removing 274
hub spacing 276
hydraulic .....
machine management center 108
hydraulic connections 150
hydraulic control valve operation 147
hydraulic couplers 41
hydraulic fill 41
hydraulic flow management 151
hydraulic motors 151
hydraulic oil filter 42
hydraulic power beyond 158
hydraulic safety signs 40
hydraulic troubleshooting 297

I

implement and steering system fluid level .....
changing 250
checking 250
implement leveling 175
inching pedal calibration 132
inching pedal control 142
information messages 14
informational signs .....
fuel 33
inside rear view mirror 83
Inspecting used filters .....
Used filters 228
installation date 39
installing .....
wheel weights 204
installing the outside wheel 272
installing the primary air filter 255
instructor seat 90
intended use 53
interior lamps 75
ISO 11783 class 3 117
ISO 11783 connector 163

L

language .....
setting 99
lift linkages .....
quick hitch 176
lighting .....
shutdown delay 77
low def level 296
lower articulation pin grease point location 260
lubricant viscosities 215
lubricant viscosities for ambient temperatures 215

M

machine ground speeds 139
machine identification MT900E 49
machine management center .....
viewing screens 105
machine Performance 165
machine specifications 330
main fuse 224
main fuse panel 219
maintenance schedule 217
manual .....
operator 13
manual parking brake 144
manual temperature control 94
measure instantaneous 109
measurement units .....
setting 97
measures .....
fuel 111
measures - field 110
memory .....
machine management center 111
monitor mounting bar 73
mounting the machine 16
multifunction light switch .....
steering column 74

N

no step 31, 36
noise prevention 23

O

oil fill level .....
transmission 41
oil filter .....
changing 226
oil sample port 228
Oil warning 21
operating .....
shuttle shift .....
operating 141
operating procedures 17
operator manual 13
operator presence functionality .....
alarm 91
operator station 18
outside rear view mirrors 83
overweight protection strategy 146

P

park brake 144
Park brake 39
Parking 18
power management 114, 137
power take-off .....
power take-off shaft 183
power take-off (PTO) .....
connecting 183
operating 182
power train 243
power train fluid 245

power train fluid level - daily .....
checking 243
power train system fluid .....
adding 244
draining 244
power train system fluid level - 400 hours .....
checking 243
powertrain protection software 109
pre-delivery checklist 55
pre-start checks 69
prefilter .....
changing 232
preselecting a gear .....
inching clutch control 140
preselecting a gear before moving 140
pressurized air 16
primary air filter 254
primary fresh air .....
filter 254
priming 233
proper disposal of waste 54
public road transportation 24

Q

quick couplers 151

R

radar calibration 133
radar connector 161
radar unit 161
radio 84
raise/lower work switch for 3-point linkage .....
3-point linkage 175
re-torque the wheel and counterweight 273
recirculation filter 255, 256
refilling the cooling system 241
relay and fuse panel for chassis 223
removing 262
removing the recirculation filter 256
replacement parts 16
replacing the wear plates 181
roading 167
roading lockout switch .....
hydraulic control levers 149
roading the machine 166
rollover protective structure 19
rotating beacon 78
routing the implement cable 163

S

safety 13
safety chain 180
safety messages 14
safety sign .....
battery shut off 45
bystander notification 38
electrical hazard 44
engine cover support 33
entanglement 29
fuel filter 29
high pressure hazard 28
hot surface 28
lift 34
operator manual 38
pinching hazard 34
power take off 35
radiation hazard 33
rear rollover hazard 35
rear terminal mini fuse relay 44
run over hazard 29
tiedown 34
safety signs .....
electrical 43
hot pressurized coolant 31
Safety signs 25
safety symbol 14
scr 236
scraper .....
dumping 210
hauling 210
loading 209
loading the tandem scraper 210
towing a stuck scraper 210
Seat belts 90
selective catalytic reduction 236
semi - mounted vacuum planter with lift assist wheels 154
separator filter 27, 30
serial number definition 51
service 13
Service brakes 143
service intervals 118, 216
setting the 3-point linkage side sway .....
side sway 177
shipping weights 332
single acting cylinders 152
single pole connectors 162
slip alarm 116
slip calibration 130
special applications .....
drawbars and hitches 208
speed matching 141
spray system pump 157
standard drawbar 181
standard operator seat 86
steering cylinders grease point locations 259
steering Wheel .....
tilt lever 82
storage .....
literature compartments 85
supply module 236
system configuration 96

T

temperatures 215
terminal .....
C1000 96
diagnostics 96
machine management center 96
machine performance 96
modes of operation 96
set the time and date 100
warning events 96
terminal settings 101
throttle control 137

toolbox .....
storage compartment 92
tooling .....
single wheel bolt 337
spacer torque wrench extension 335
wheel bolt 36 mm wrench 339
wheel guide stud 340
torque specifications 326
towed scraper .....
general guide lines 209
hydraulic connections 208
towing a stuck machine 168
towing machine .....
charged accumulator unit 168
dead engine 168
tractor settings 115
trailer connector 163
transmission .....
machine management center 107
transmission / hydraulic oil filter 42
transmission control 138
transmission control lever 139
transmission gauge 41
transmission oil fill 42
transmission shifting diagram 140
transmission troubleshooting 301
transporting machine 170

U

upper articulation grease point location 260

V

vent locations 95
version information 97
video camera- software version 3.2 and before .....
enabling 135

W

walk-around inspection 67
warranty 13
water thermostat 242
water valve shutoff 238
wheel .....
inside wheel installing 266
inside wheel removing 264
installing 266
outside wheel removing 262
wheel slippage .....
calculating 196
wheel weights .....
installing 204
removing 202
wiper mirror 38
wire access 45

© AGCO Corporation, 2017. All rights reserved.
582773D1C (English)
November 2017